proton EUROPE

www.proton-europe.com

CONGELADOR PROTON

PF-3 HoiHoi

proton プロトングループ RYOHO FREEZE SYSTEMS proton +DINING enrich food manufacturers,inc. PROTON CAR 全国巡回!! プロトン号

It is Useful !!

Smaller food, treasure stock

proton +FREEZER

プロトン ホイホイ HOI HOI

鮮度そのまま NHOIHOIS プロトン® 凍結品

Improve the quality of frozen ingredients
Reduction of waste loss
To level the work !

[PF-H3 ～Proton Hoi Hoi～]

[machine dimensions]
900W×868D×1850H
[Utilities]
3-phase 200V 20A
(Japan spec)
[Special Tray]
531W×328D
4Tray storage
(Hotel Pan 1/1 サイズ)
[Frozen storage capacity]
240liters

The upper part is a proton freezing machine
The lower part is a frozen storage

Freeze list ～Let's Proton!～

Sushi

Steak

Chinese cuisine

Snack foods

Fine Cuisine

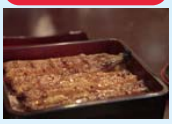

Fried food

Vegetable dishes

Dessert

RYOHO FREEZE SYSTEMS CO.,LTD.
URL： http://www.freeze01.com
【Head office】6-3-10, Oomiya-cho,Nara-City,NARA,630-8115 JAPAN TEL：+81-742-36-9056 FAX：+81-742-36-9066
【Okinawa factory】5192-39,Katsurenhaebaru,Uruma-city,Okinawa,904-2311 JAPAN
TEL：+81-98-939-9056 FAX：+81-98-939-9066

RYOHO FREEZE SYSTEMS. CO.

dimensions：W900 x D750 x H1850

※ Except However bis, the ledge switches, etc.

Panel thickness：75t

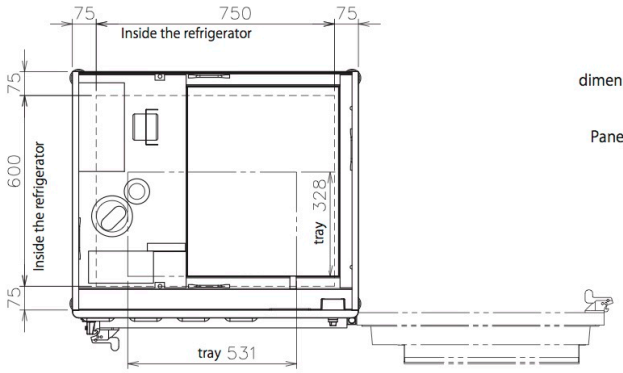

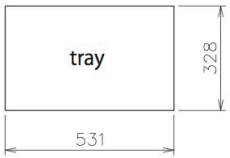

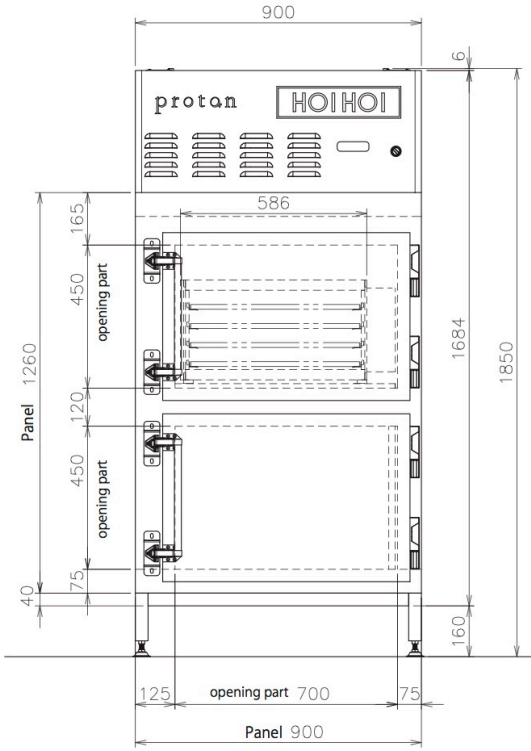

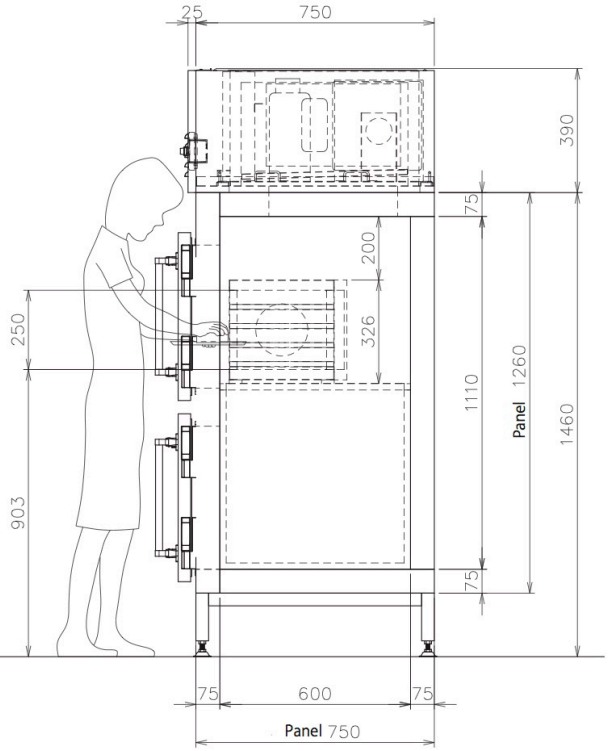

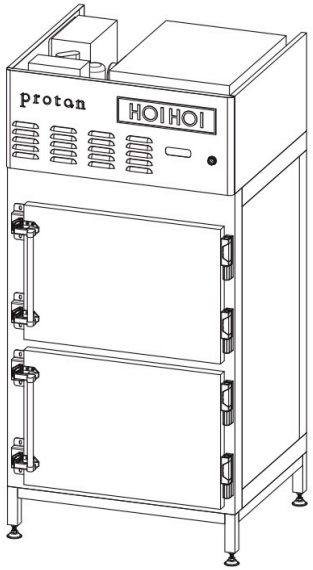

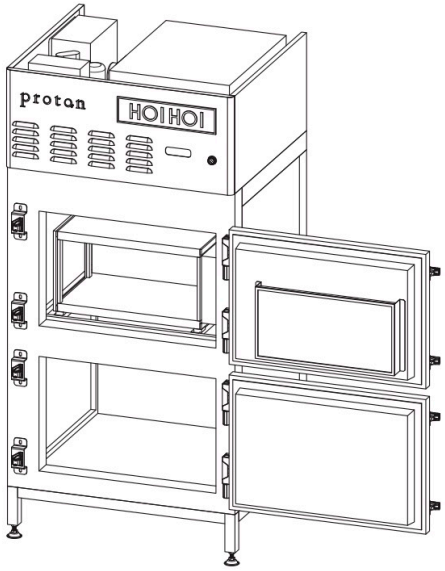

CLIENT NAME	DRAWING NAME	SCALE	DATE	DRAWING NO.
	Proton HOIHOI 外観図	1/15	2014/11/20	R141120−01

Proton Freezer : PF-H3（HOIHOI） Specification

Item	Specification
(Specification) Application	Rapid Freezing Equipment for Foodstuff
Inside Temperature of Freezer	Air blast system −25 degree
Temperature of Foodstuff to be loaded	20 degree to −18 degree as criteria
Capacity	Nominal 3kg/hour
	Capable of freezing amount of 3kg foodstuff per hour.
	Figured out by our calculation, provided 50% water is
	included in foodstuff.
Freezing time	Varied according to dimension, allocation, characteristics.
	It is recommended to confirm how long it takes to
	freeze at pretesting.
Proton freezing area	542W × 330D × 250H
Keep frozen Area	300L
Domension	Refer to the drawing
Tray size	530W 325D (SUS) × 4 tray
Oscillation Unit	Oscillation amplifier × 1, Antenna × 16
Yoke-unit configuration	Normal (561W×361D×314H) × 1horizontal row × 1unit
Refrigerator	(Mitsubishi) 1HP、R404A
	Integrated air-cooled inverter condensing unit
	AFR－RP1B、hot gas defrost
Cooling fan	Propeller fan for low temperature
Continuous working time	It is based on installation environment and
	opening-and-closing frequency.
Defrost	Timer or hand operation
Weight	250kg
(Utilities)	
Power supply	3Φ AC200V 50／60Hz
Braeaker capacity	20A
Socket	Hooking type receptacle (maleside)