Large Flush Wood Insert

NexGen-Hybrid

(Rectangular or Arched)

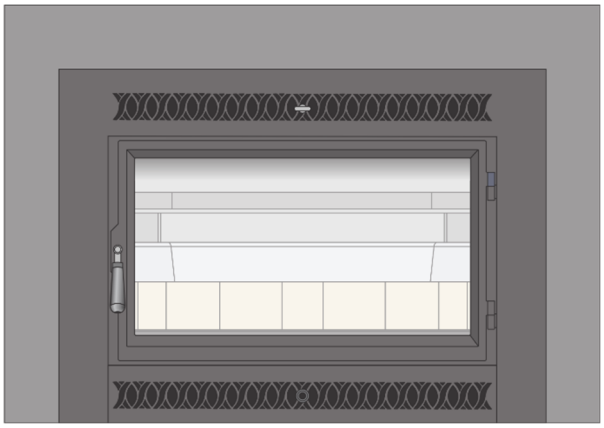

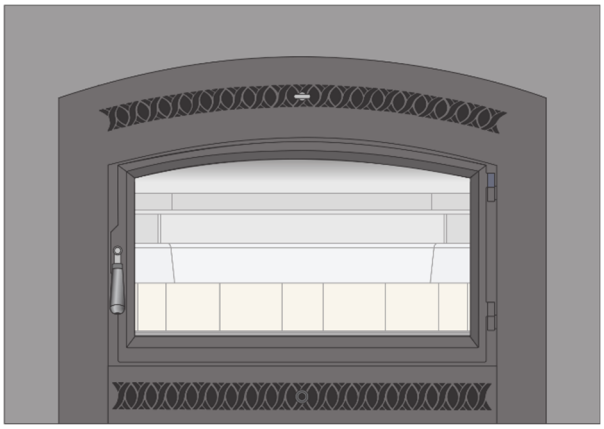

Manual

Masonry Fireplace Insert

Save these instructions for future reference

SAFETY NOTICE:

If this appliance is not properly installed, a house fire may result. For your safety, follow the installation directions. Contact local building or fire officials about restrictions and installation inspection requirements in your area.

12521 Harbour Reach Drive
Mukilteo, WA 98275
www.travisproducts.com

© Copyright 2023, T.I.

$10.00 100-01573
11/13/2024

Listed by
Omni-Test Laboratories, Inc.
Report #0028WN130E & 0028WN130S
Certified to US STD 1482-2022
Certified to CAN/ULC S628-2022

Introduction

We welcome you as a new owner of a Large Flush Wood Insert. In purchasing a Large Flush Wood Insert, you have joined the growing ranks of concerned individuals whose selection of an energy system reflects both a concern for the environment and aesthetics. This insert is one of the finest appliances the world over. This manual will explain the installation, operation, and maintenance of this appliance. Please familiarize yourself with the Owner's Manual before operating your appliance and save the manual for future reference. Included are helpful hints and suggestions which will make the installation and operation of your new appliance an easier and more enjoyable experience. We offer our continual support and guidance to help you achieve the maximum benefit and enjoyment from your appliance.

Important Information

No other Large Flush Wood Insert appliance has the same serial number as yours. The serial number is on the label on the back of the appliance.

This serial number will be needed in case you require service of any type.

Model: Large Flush Wood NexGen Hybrid

Serial Number: _____

Purchase Date: _____

Purchased From: _____

_____

_____

Register your warranty online at:

traviswarranty.com

Save Your Bill of Sale.

To receive full warranty coverage, you will need to show evidence of the date you purchased your heater.

We suggest that you attach your Bill of Sale to this page so that you will have all the information you need in one place should the need for service or information occur.

NATIONAL FIREPLACE INSTITUTE NFI CERTIFIED www.nficertified.org

We recommend that our woodburning hearth products be installed and serviced by professionals who are certified in the U.S. by the National Fireplace Institute® (NFI) as NFI Woodburning Specialists or who are certified in Canada by Wood Energy Technical Training (WETT).

Wood Energy Technical Training www.wettinc.ca

Canadian Installations

The authority having jurisdiction (such as municipal building department, fire department, fire prevention bureau, etc.) should be consulted before installation to determine the need to obtain a permit and inspection.

Introduction 2
Important Information 2
Installation Options 6
Features 6
Heating Specifications 6
Dimensions 6
Emissions and Efficiency 6
Planning the Installation 7
Preparation for Installation 7
Packing List 7
Additional Accessories Needed for Installation 7
Additional Requirements for Canada 7
Ash Guard 7
Fireplace Requirements 8
Fireplace Altered Tag 8
Insert Placement Requirements 9
Masonry Fireplace - Hearth Extension Requirements 10
Masonry Fireplace Requirements 10
Mantel Requirements 10
Drafting Performance 11
Insert Rollers 11
Leveling Bolt Installation 11
Flue Installation 12
Surround Panel Installation 13
Face Installation 13
Electrical Requirements 13
Re-Routing the Electrical Cord to the Left Side 14
Safety Notice 15
Before Your First Fire 15
Opening the Door 16
Bypass Operation 17
Maintaining Combustor Burn-Off 18
Before Starting a Fire 19
Adjusting the Burn Rate 20
Understanding Your Heater's Combustion System 21
Burning Your Heater 21
Blower Operation 22
Re-Loading the Stove 22
Overnight Burn 22
Normal Operating Sounds 22
Hints for Burning 23
Selecting Wood 23
Do Not Burn List 24
Troubleshooting 25
Daily Maintenance (during the heating season) 26
Monthly Maintenance (during the heating season) 27
Yearly Maintenance 28
Baffle Removal & Replacement 31
Door Parts 32
Blower and Electrical Parts 33
Firebox Parts 33
Air Tube Identification 34
Baffle Removal & Replacement 34
Brick Removal & Replacement 37
GreenStart™ Igniter – Firebrick and Housing Installation 38
Listing Label 41

Safety Precautions

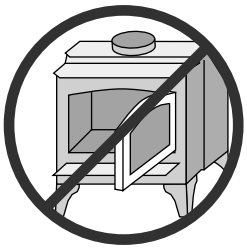

The viewing door must be closed and latched during operation.

Smoke from this appliance may activate a smoke detector when the door is open.

Never block free airflow through the air vents on this appliance.

This appliance is designed and approved for the burning of cord wood only. Do not attempt to burn any other type of fuel other than cord wood in this appliance, it will void all warranties and safety listings.

Do not touch the appliance while it is hot and educate all children about the danger of a high-temperature appliance. Young children should be supervised when they are in the same room as the appliance.

This appliance must be properly installed to prevent the possibility of a house fire. The instructions must be strictly adhered to. Do not use makeshift methods or compromise in the installation.

Inspect the chimney connector and chimney at least twice monthly and clean if necessary. Creosote may build up and cause a house fire.
Do not connect this appliance to any chimney serving another appliance.

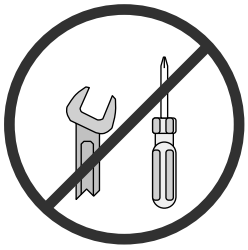

Never try to repair or replace any part of this appliance unless instructions are given in this manual. All other work must be done by a trained technician.
Do not make any changes or modifications to an existing masonry fireplace or chimney to install this appliance.

Gasoline or other flammable liquids must never be used to start the fire or "Freshen Up" the fire. Do not store or use gasoline or other flammable liquids in the vicinity of this appliance.

Ashes must be disposed of in a metal container with a tight lid and placed on a non-combustible surface well away from the home or structure.

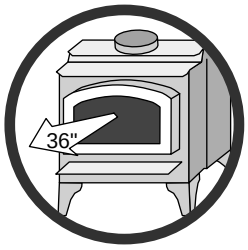

Keep furniture, drapes, curtains, wood, paper, and other combustibles a minimum of 36" away from the front of the appliance.

Contact your local building officials to obtain a permit and information on any installation restrictions or inspection requirements in your area. Notify your insurance company of this appliance as well.

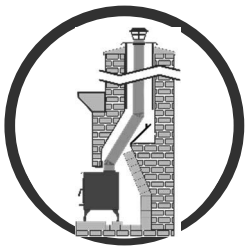

This appliance must be connected to a listed stainless-steel liner that runs the entire height of the existing masonry fireplace chimney.

Do not place clothing or other flammable items on or near this appliance.

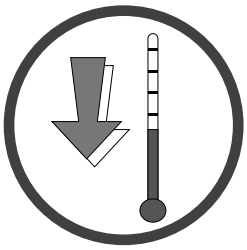

Allow the appliance to cool before carrying out any maintenance or cleaning.

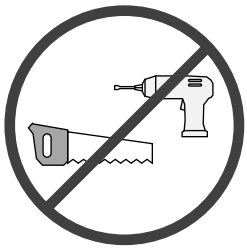

This wood heater has a manufacturer-set minimum low burn rate that must not be altered. It is against federal regulations to alter this setting or otherwise operate this wood heater in a manner inconsistent with operating instructions in this manual.

Maintain the door and glass seal and keep them in good condition.

Do not operate this heater with broken or missing glass.

Avoid placing wood against the glass when loading. Do not slam the door or strike the glass.

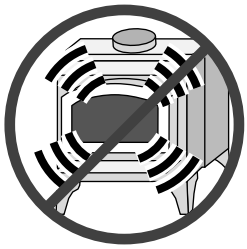

Overfiring the appliance may cause a house fire. If a unit or chimney connector glows, you are over-firing.

Do not throw this manual away. This manual has important operating and maintenance instructions that you will need at a later time. Always follow the instructions in this manual.

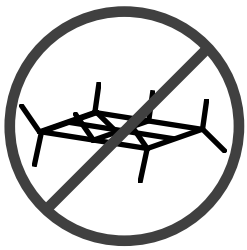

Do not use a grate or other device to elevate the fire off of the firebox floor. Burn the fire directly on the bricks.

Travis Industries, Inc. grants no warranty, implied or stated, for the installation or maintenance of your appliance, and assumes no responsibility for any consequential damage(s).

Smoke and CO Detectors: Make sure your home has a working smoke detector, especially near any bedrooms. We recommend having a smoke and/or CO detector in the same room as the wood heater for additional safety.

Proposition 65 Warning: Fuels used in gas, woodburning or oil-fired appliances, and the products of combustion of such fuels, contain chemicals known to the State of California to cause cancer, birth defects, and other reproductive harm.

California Health & Safety Code Sec. 25249.6

Travis Wood Burning Fireplaces, Stoves and Inserts are protected by one or more of the following patents; U.S. 9,170,025 4,665,889 as well as other U.S. and Foreign Patents pending.

This wood heater needs periodic inspection and repair for proper operation. It is against federal regulations to operate this wood heater in a manner inconsistent with the operating instructions in this manual.

This wood heater contains a catalytic combustor, which needs periodic inspection and replacement for proper operation. It is against federal regulations to operate this wood heater in a manner inconsistent with operating instructions in this manual, or if the catalytic element is deactivated or removed.

This room heater shall not be installed in a Factory-Built fireplace.

Canada Only

Installation shall be in accordance with CSA B365, Installation Code for Solid-Fuel-Burning Appliances and Equipment, building codes and standards that apply to the structure where the space heater is installed.

Installation Options

- Masonry Fireplace Insert

Features

- Single Air Control
- Steel Plate Construction (Up to 5/16")
- Heavy Duty Refractory Firebrick
- High-Tech Blower - Standard

Heating Specifications

Approximate Maximum Heating Capacity (in square feet) *	1,500 to 2,500
Maximum Burn Time	Up to 14 Hours
EPA Tested Crib Wood BTUs per Hour **	11,162 to 39,875
BTUs per hour using cord wood	18,000 to 67,000

* Heating capacity will vary depending on the home's floor plan, degree of insulation, and the outside temperature. It is also affected by the quality and moisture level of the fuel.

** EPA tests to determine BTU output are performed with a single standardized load of dimensional lumber (crib fuel). When burning cord wood, the fireplace will achieve higher BTUs. The BTU output of the fireplace can be higher than the numbers established during EPA testing depending upon the quantity and species of wood being burned. Based on our in-house testing using cord wood, real world BTUs will typically fall between the cord wood numbers listed above.

This model was tested for efficiency using method B415.1-10 and was determined to have a weighted average Higher Heating Value (HHV) Overall Heating Efficiency (OHE) of 77.8%. The overall efficiency of the heater may be lower if the heater is operated without a heat exchange blower or with the installed heat exchange blower turned off.

Dimensions

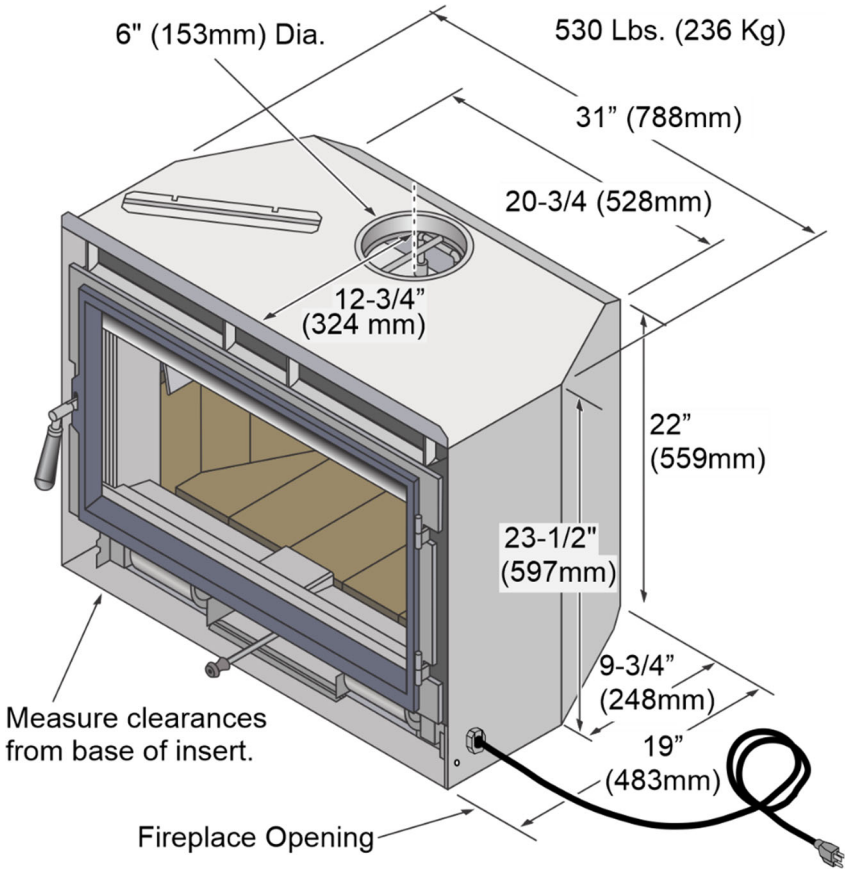

*Measure clearances from the base of the insert

Emissions and Efficiency

This heater meets the 2020 U.S. EPA's crib wood emission limits for wood heaters. Tested to ASTM E27801-10, ASTM 2515-11, CSA B415.1-10 this heater has been shown to deliver heat at rates ranging from 11,162 to 39,875 BTU/hr. and an emission value of .8g/h. Report No. 0028WN130E.

SAFETY NOTICE: Please read this entire manual before you install and use your new room heater. Failure to follow instructions may result in property damage, bodily injury, or even death. Contact local building or fire officials about restrictions and installation inspection requirements in your area.

Planning the Installation

We suggest that you have an authorized Travis Industries dealer install your fireplace insert. If you install the fireplace insert yourself, your authorized dealer should review your installation plans.

Check with local building officials for any permits required for the installation of this fireplace insert and notify your insurance company before proceeding with the installation.

The location of your wood heater in your home will decide how effectively the heat produced will spread throughout your house. Attention to the home design with consideration of natural convection and air circulation should be taken into account when choosing the placement of your heater within the home.

Preparation for Installation

- Check for damage to the exterior of the fireplace insert (dents should be reported, and scratches can be fixed by applying touch-up paint).
- Check the interior of the firebox (replace cracked firebrick and make sure the baffle is in place).

The fireplace insert can be lightened by removing the firebricks and baffle (pg. 37) - replace them before operation.

Packing List

- Wood Moisture Meter
- Bypass tool
- Gloves

Additional Accessories Needed for Installation

- Face
- Surround Panels (see page13)

Additional Requirements for Canada

- Do not remove bricks or mortar from the existing fireplace.
- This fireplace insert must be installed with a continuous chimney liner of 6” diameter extending from the fireplace insert to the top of the chimney. The chimney liner must conform to the Class 3 requirements of CAN/ULC-S635, Standard for Lining Systems for Existing Masonry Chimneys and Vents, or CAN/ULC-S640, Standard for Lining Systems for New Masonry Chimneys.
- Permanently seal any opening between the masonry of the fireplace and the facing masonry.
- The fireplace insert or surround panels, may be removed to inspect the fireplace insert and fireplace.
- Lock existing dampers in the open position.

Ash Guard

The included ash guard prevents ash from exiting the door opening. It is shipped detached to prevent damage during shipping.

Install the ash guard as shown below. Note how the horizontal tab fits in front of the door opening.

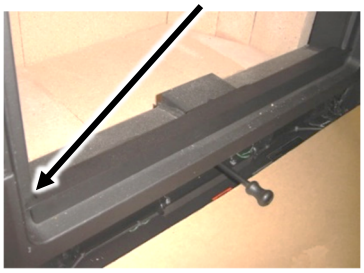

Fireplace Requirements

The minimum size requirements are shown below.

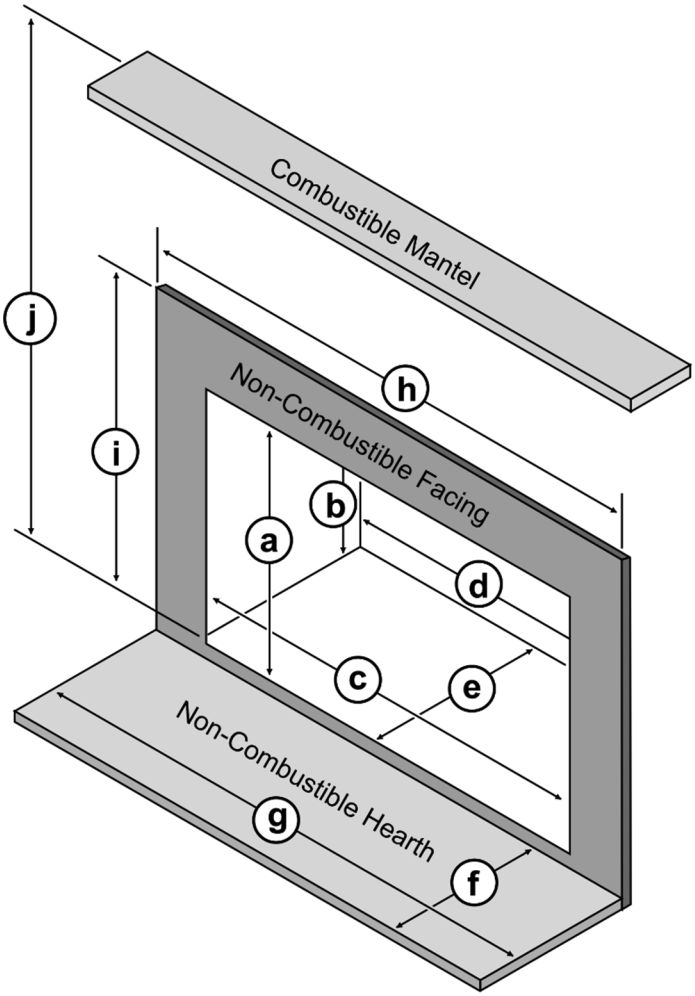

Minimum Fireplace Size	
(a) Height (front)	23-3/4” (604mm)
(b) Height (rear)	22-1/4” (566mm)
(c) Width (front) - Without GreenStart Igniter	33”* (839mm*)
(c) Width (front) - With GreenStart Igniter (measured 3” back from opening)	40” (1016mm)
(d) Width (rear)	21” (534mm)
(e) Depth	19-1/8” (486mm)
(f) Hearth Depth**	16” - 20”** (407mm - 508mm**)
(g) Hearth Width	47” (1093mm)
(h) Facing Width	42” (1194mm)
(i) Facing Height above Base of Insert	37” (940mm)
(j) Mantel Height above Base of Insert	41” (1042mm)

***Includes 2” (51mm) for power cord installation**
**** See Minimum Clearance table on page 9 for details.**

Mantel Clearances

The maximum mantel depth is 12” (305mm).

NOTE: The combustible area above the non-combustible facing must not protrude more than. 3/4" (20mm) from the facing. If it does, it is considered a mantel and must meet the mantel requirements listed in this manual.

Fireplace Altered Tag

Attach the "This fireplace has been altered..." plate to the fireplace (use two screws or another suitable method). You may wish to place it in a location where it will be covered by the surround panels.

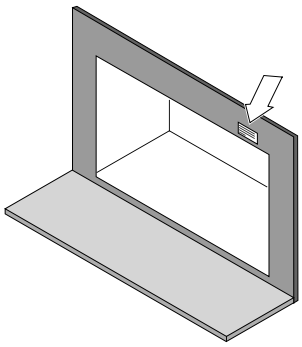

Insert Placement Requirements

- The insert must be placed so that no combustibles (e.g., drapes, doors) are within, or can swing within 36” (915mm) of the front of the insert.
- The insert and hearth must be installed on a level, secure floor.
- The minimum clearances, facing, and hearth requirements in Figure 3 must be met.

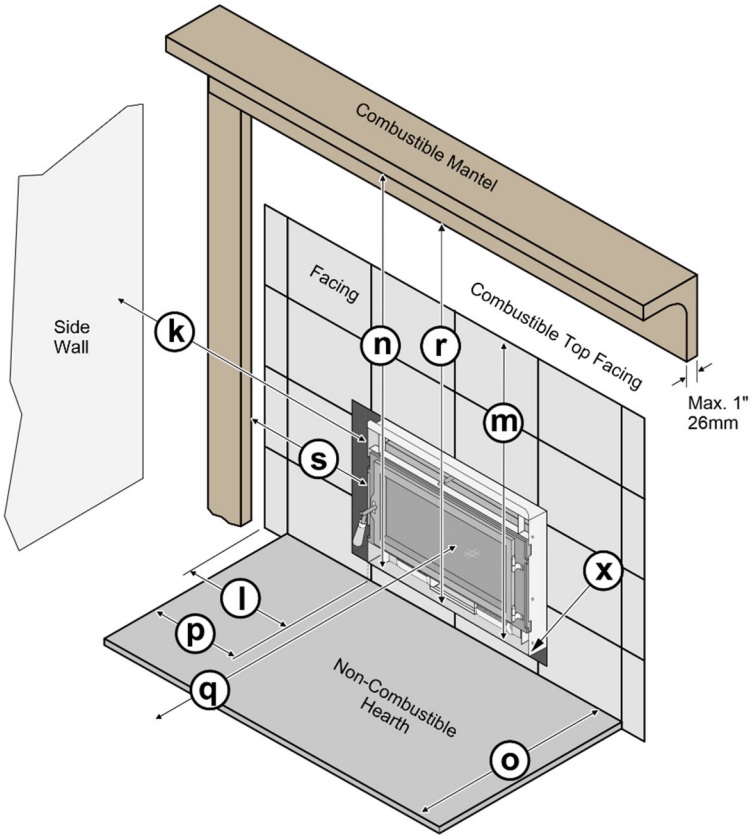

Minimum Clearances	
(k) Sidewall	10-1/2” (267mm)
(l) Side Facing (non-combustible)	5-1/2” (140mm)
(m) Top Facing (non-combustible)	37” (940mm)
(n) Mantel (combustible)	41” (1042mm)
(o) Front Hearth **- 16" (407mm) hearth the base of the insert must be 2" (51mm) above combustible floor surfaces (carpet, wood, etc.).** **- 18" (458mm) hearth the base of the insert must be 1" (25mm) above combustible floor surfaces(carpet, wood, etc.).** **- 20” (508mm) hearth the base of insert may be level with combustible floor surfaces (carpet, wood, etc.).**	16”(407mm*) to 20”(508mm*) - - - - - - - - - - - - Min 16”(407mm) **US** Min 18”(458mm) **CAN**
(p) Side Hearth	8” (204mm)
(q) Front of Insert	36” (915mm)
(r) Mantel Breastplate (max. 1” (26mm thick))	37” (940mm)
(s) Mantel Column (max. 8” 204mm deep))	5-1/2” (140mm)
(x) Extension onto Hearth (from front edge of insert)	0” (0mm)

10 Fireplace Insert Installation (for qualified installers only)

Masonry Fireplace - Hearth Extension Requirements

- Must extend 16" (407mm) (USA) or 18” (458mm) (Canada) in front of the insert and 8" (204mm) on both sides.
- Masonry hearth extensions must be non-combustible and at least .018" thick (26 gauge).

Masonry Fireplace Requirements

- The chimney must have a positive connection (full reline).
- The entire fireplace, including the chimney, must be clean and undamaged. Any damage must be repaired prior to the installation of the insert.
- Chimney height: 15' (4.5M) minimum; 33' (10M) maximum (measured from the base of the insert).
- The fireplace insert must be placed on a masonry hearth built to UBC standards.

Mantel Requirements

- See minimum mantel clearances below.

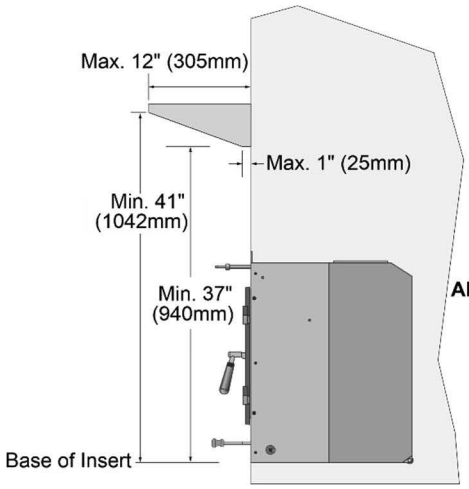

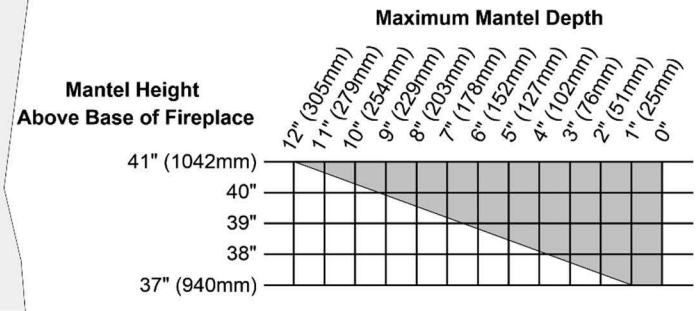

Drafting Performance

Draft is the force that moves air from the appliance up through the chimney. The amount of draft in your chimney depends on the length of the chimney, local geography, nearby obstructions, and other factors. Too much draft may cause excessive temperatures in the appliance and may damage the heater. Inadequate draft may cause back puffing into the room and `plugging' of the chimney. Inadequate draft will cause the appliance to leak smoke into the room through the appliance and chimney connector joints. An uncontrollable burn or excessive temperature indicates excessive draft.

Insert Rollers

Two rollers are built into the back edge of the insert. This allows the insert to be rolled into position by lifting the front of the insert and pushing it into position.

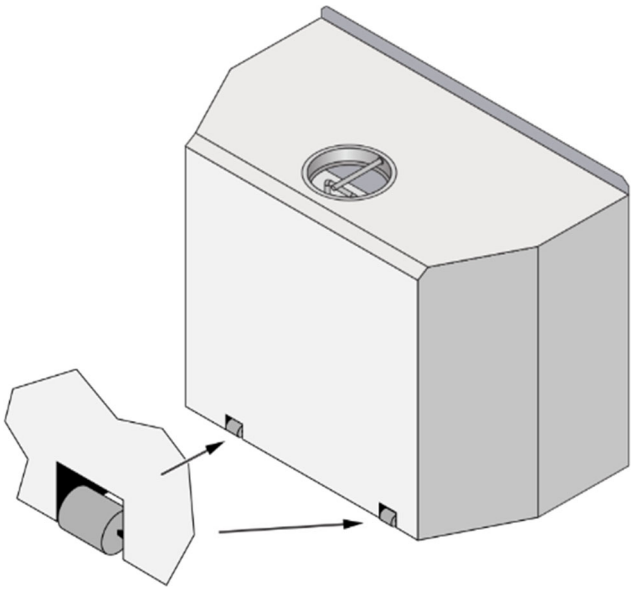

Leveling Bolt Installation

MASONRY NOTE: Place a metal plate below the bolts on masonry fireplaces to prevent damage to the floor brick.

Two leveling bolts are pre-installed on the insert to allow for proper leveling within the fireplace. To access the bolts, remove the back corner firebricks and cover plates (“a” and “b”). The bolts are pre-threaded to a weld nut on the base of the insert. Use a 3/4” socket wrench to screw the bolts down (clockwise) until the insert is level (see “c”).

SEALING THE COVER PLATE: We recommend sealing the cover plate with furnace cement (place it on the underside of the cover plate).

BOLT LENGTH: The included bolts allow approximately 1” of rise. If additional rise is required, use a longer 1/2-13 thread bolt. Make sure the additional bolt length does not interfere with the cover plate.

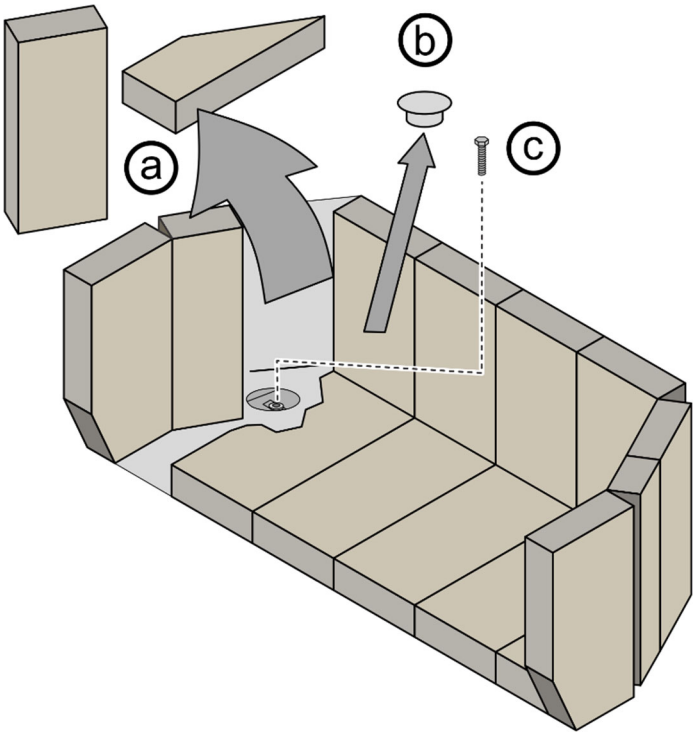

Flue Installation

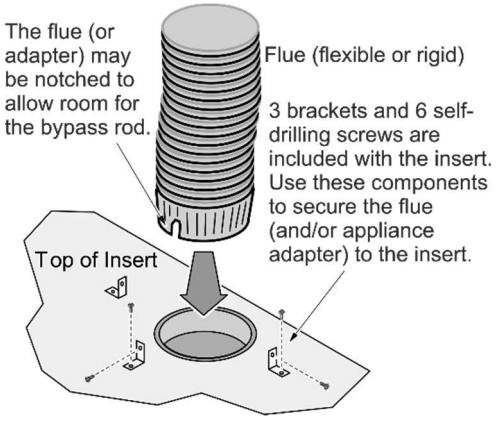

Sealing the Flue to the Insert

The flue connection is vitally important. To ensure proper draft, and to prevent smoke spillage during re-loading, **it is crucial for the flue to be sealed with fireplace cement**. If an adapter is used, both joints to the liner and the insert should be sealed. Use a generous amount of fireplace cement at every connection (where the flue connects to the insert and at every joint).

In addition, we recommend using non-combustible fiberglass insulation to seal the fireplace enclosure. By sealing the top and bottom of the chimney, and the surround panels, you will be ensuring outside air is not pulled into the chimney.

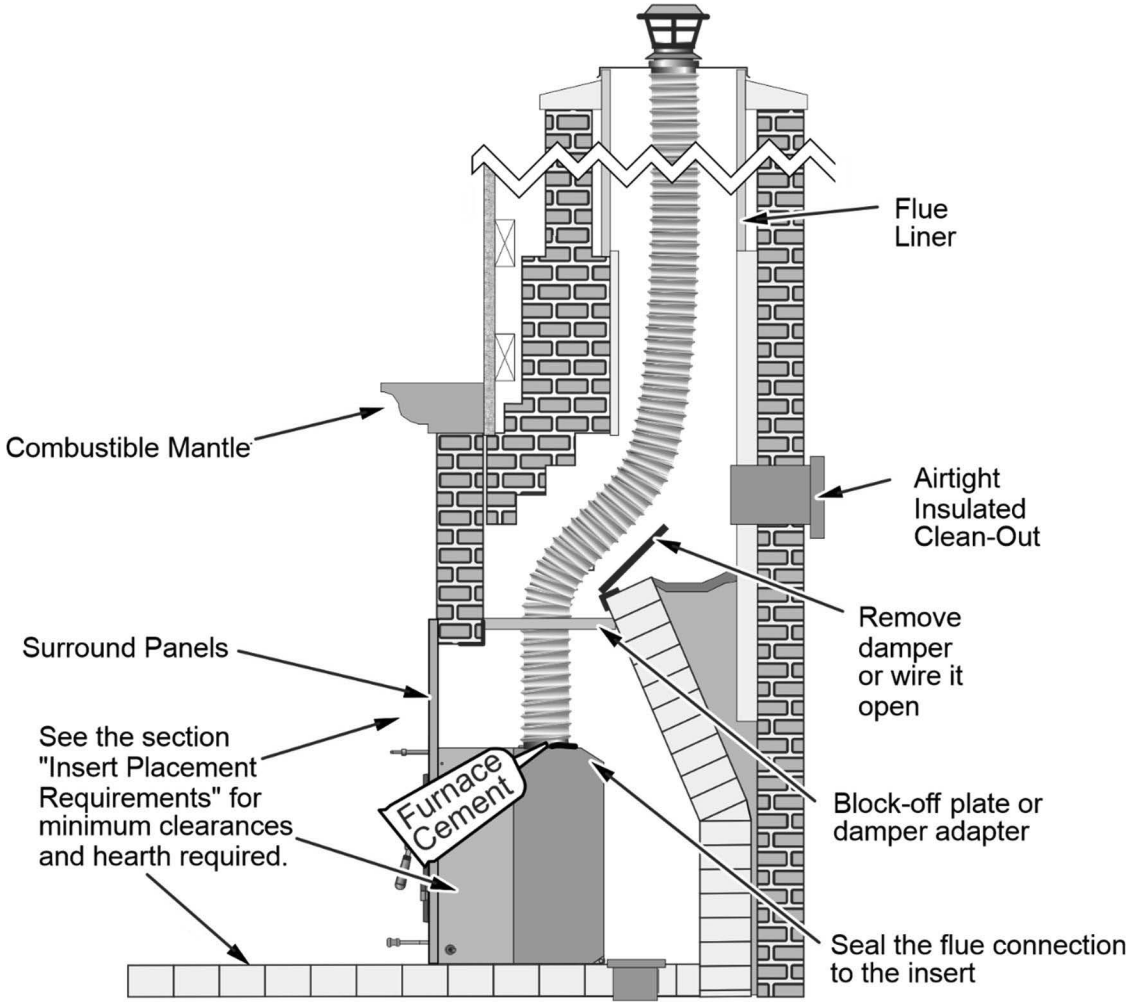

Surround Panel Installation

	Width	Height	Part#
Standard Size	42" (1067mm)	32-1/2" (826mm)	96100392

1. Before installing, the insert should be in place with the flue attached. Attach the brackets as shown below, using the screws included in the hardware pack with the insert. Make sure the brackets are flush with the front of the convection chamber.

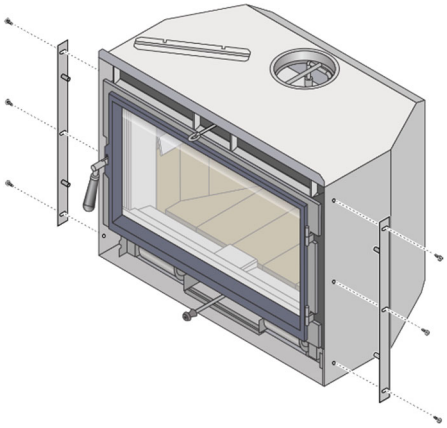

2. Attach the surround panel as shown below.

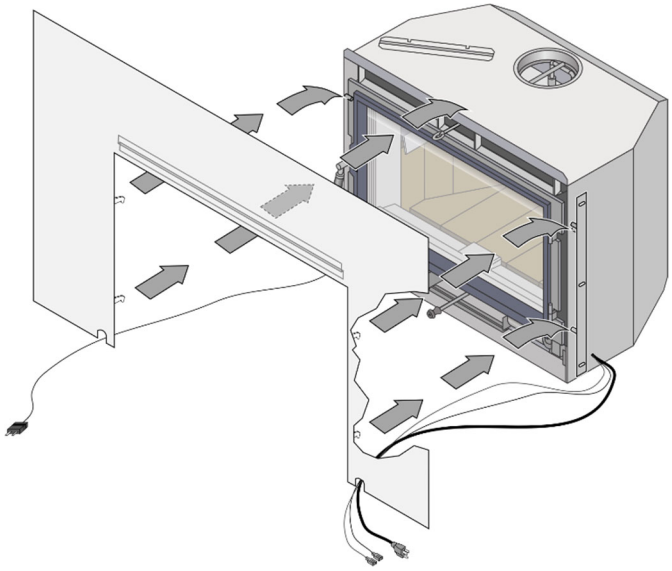

HINT: When installing the panel, route the wires through the notch on the bottom of the panel (either side).

Face Installation

There are several face options available for this fireplace insert. Refer to the instructions included with your face.

Electrical Requirements

Without GreenStart™ Ignitor

- Plug the stove into a grounded receptacle supplying a minimum of 1.8 amps (115 Volts, 60Hz, 207 watts).

With GreenStart™ Ignitor

- Plug the stove into a grounded receptacle supplying a minimum of 9.8 amps (115 Volts, 60Hz, 1127 watts).

NOTE: A hardwire kit is available from Travis Industries (sku# 97200337). Contact your dealer for details.

Re-Routing the Electrical Cord to the Left Side

The power cord is connected to the right side of the insert when it leaves the factory. It may be re-routed to the left side following the directions below. Do this procedure before installing the surround panels.

- Disconnect the Molex connector and remove the power cord following the directions below.

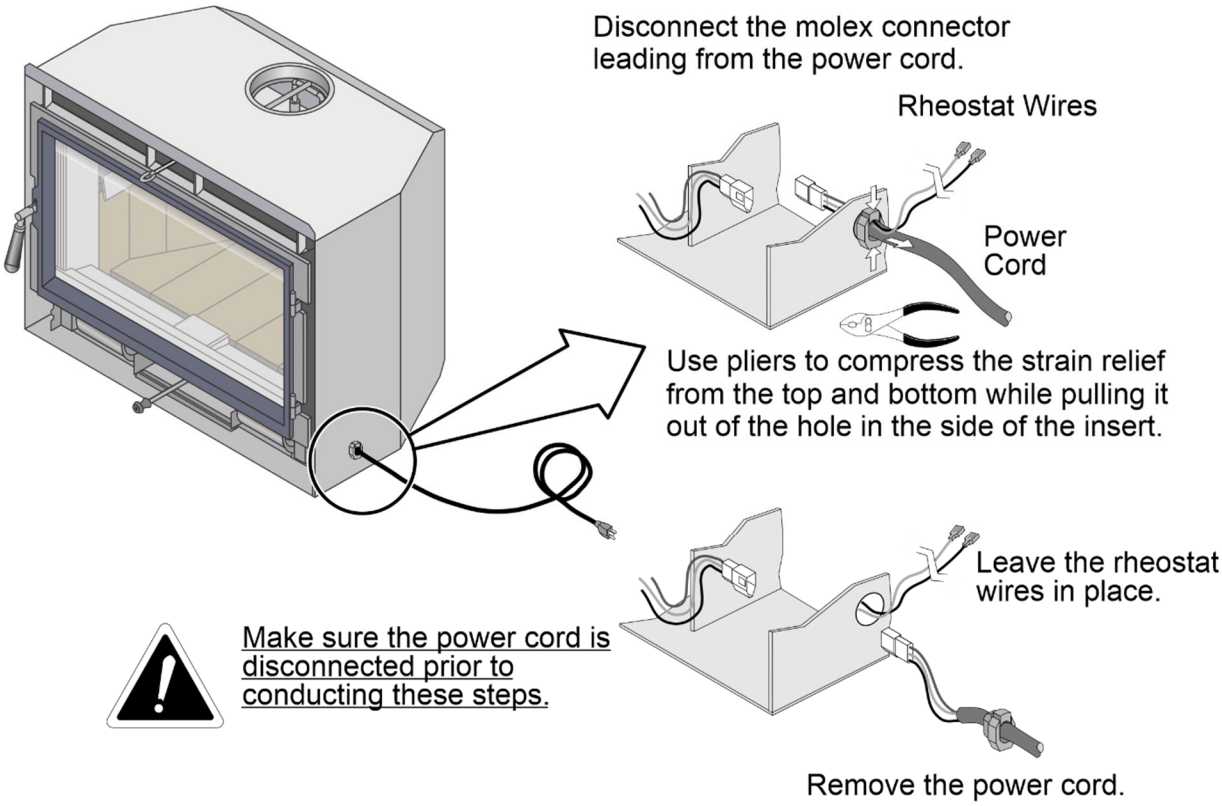

- Connect the power cord to the left side following the directions below.

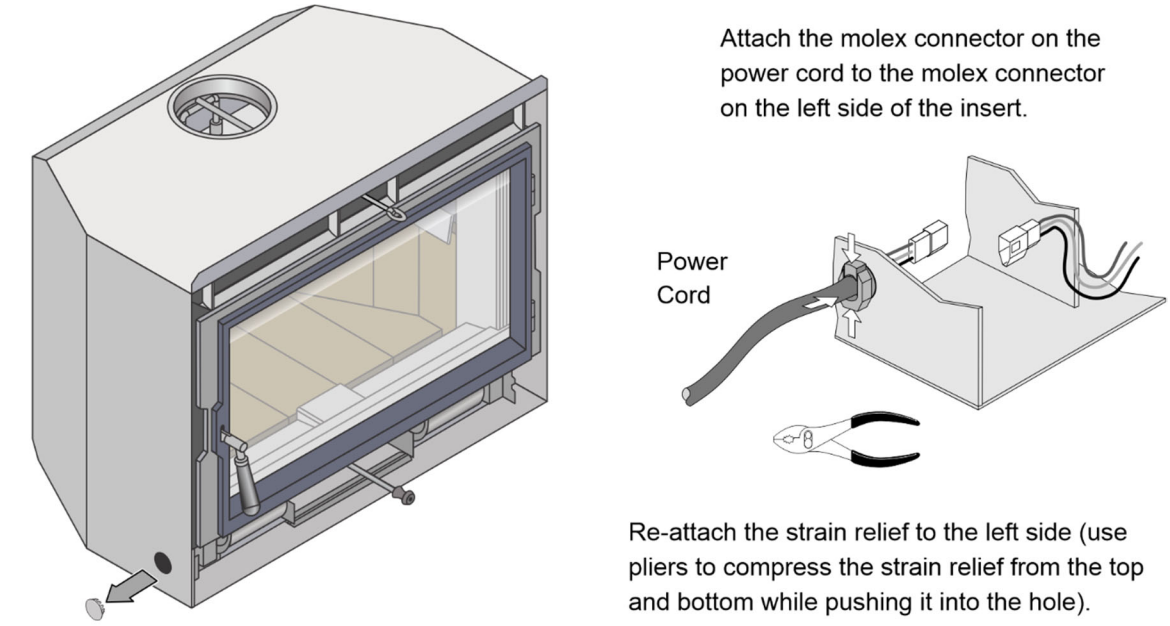

Safety Notice

If this appliance is not properly installed, a house fire may result. For your safety, follow the installation directions. Contact local building or fire officials about restrictions and installation inspection requirements in your area.

Read and follow all the warnings on pages 4 and 5 of this manual.

Before Your First Fire

Verify the Installation

Before starting the stove, verify that the stove is properly installed and all of the requirements in this manual have been followed.

Keep all flammable materials 36" away from the front of the stove (drapes, furniture, clothing, etc.).

Curing the Paint

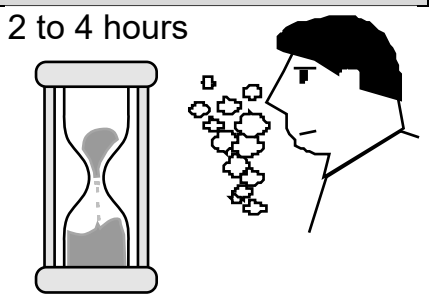

Follow the steps below to cure the paint (first fire):

a) Open doors and windows in the room to ventilate the heater during the curing process.

b) Vacate the room. The fumes from the initial heating process are non-toxic but may be unpleasant.

c) Slowly bring the heater to a medium burn (400°F/204°C) for 45 minutes. Then increase the burn temperature to a hot burn (600°F/315°C) for an additional 45 minutes. This will cure the paint.

Door Gasket - The door gasket can adhere to the paint on the front of the heater. To prevent this, carefully open and close the door a few times during the paint curing process.

Carbon Monoxide (CO) Emissions

Smoke from wood heaters contains CO. This gas is an indication of incomplete combustion and is detrimental to the environment and your health. The more visible the smoke, the higher the CO levels. Burning dry wood is the most significant step you can take to reduce CO emissions. It is also important to understand the combustion process so you can burn your heater efficiently. Read the manual thoroughly so that you can operate your heater in the most clean and efficient manner possible.

Over-Firing the Stove

DO NOT OVERFIRE THIS HEATER: Attempts to achieve heat output rates that exceed heater design specifications can result in permanent damage to the heater.

This stove was designed to operate at a high temperature. But due to differences in vent configuration, fuel, and draft, this appliance can be operated at an excessive temperature. If the stovetop or other area starts to glow red, you are over-firing the stove. Shut the air control down to low and allow the stove to cool before proceeding.

Overfiring may lead to damage to plated surfaces. If any portion of the heater glows red, it is considered over-firing and will void the warranty.

Opening the Door

The door becomes hot during use - use gloves or a tool to prevent burns.

To prevent smoke from entering the room, open the air control and bypass before opening the door. You can also open the door a small amount and let air enter the firebox.

Opening the Door

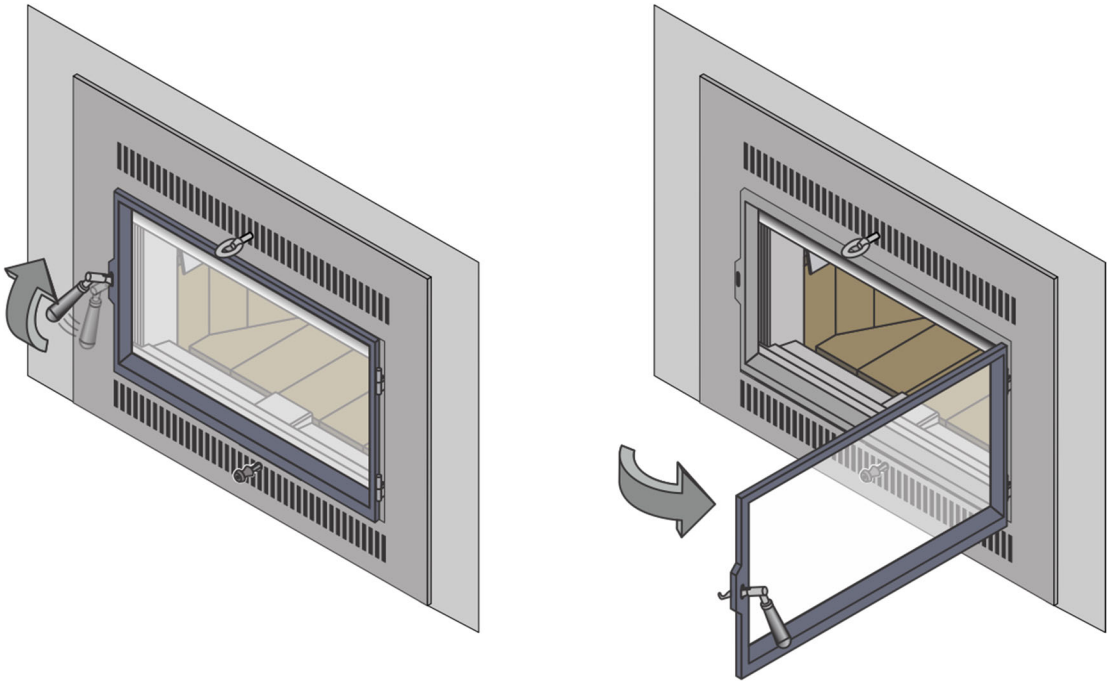

Bypass Operation

The bypass control becomes hot during operation - use gloves or a tool to prevent burns.

The bypass controls the flow of smoke inside the heater. When pulled out, smoke goes directly up the flue, creating more draft. When pushed in, the smoke goes around the baffle, utilizing the secondary combustion and making the heater more efficient.

- When starting or re-loading, pull the bypass out, if necessary.
- During normal operation, push the bypass in.

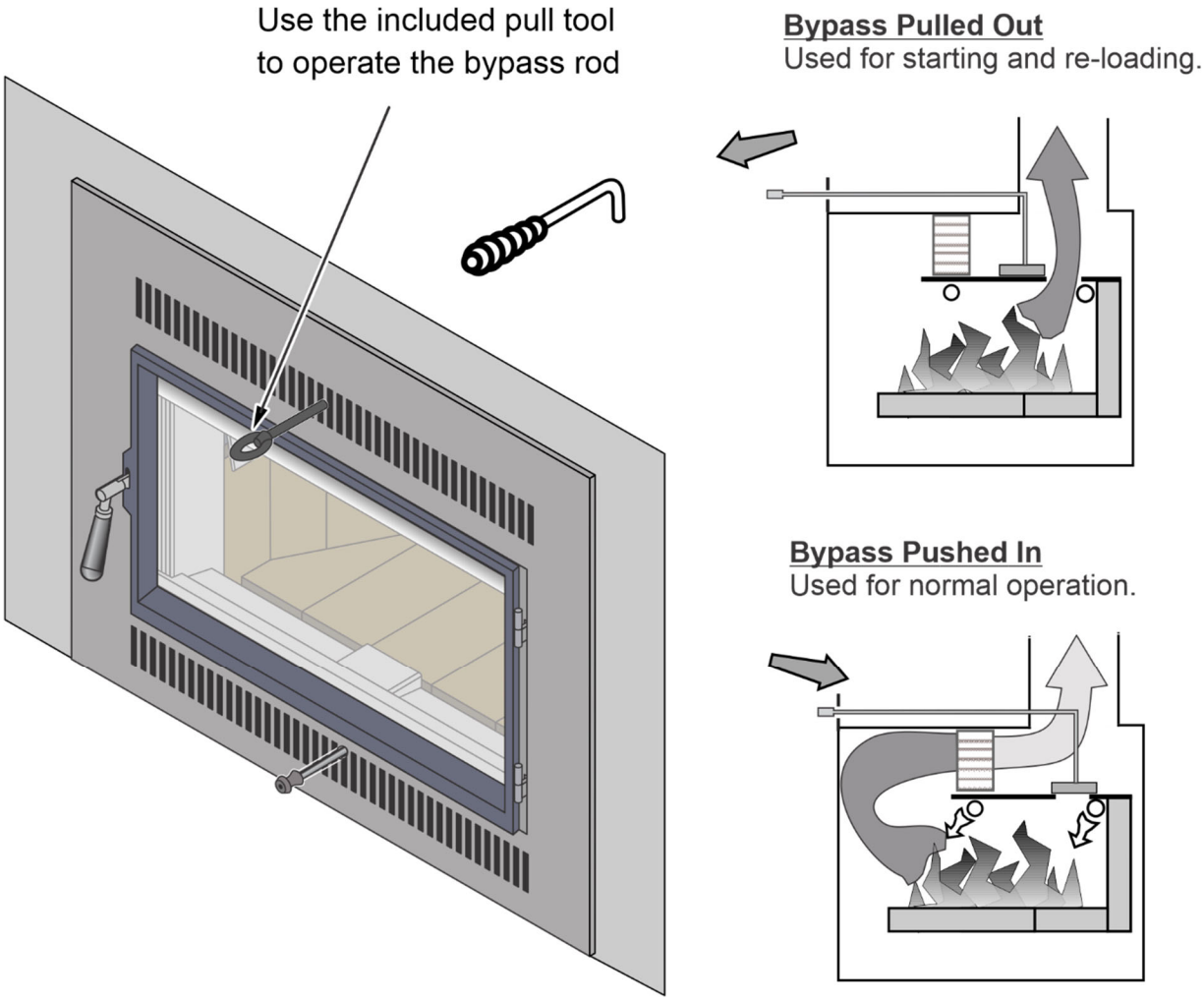

Maintaining Combustor Burn-Off

WARNING:
The bypass control becomes hot during operation - use gloves or a tool to prevent burns.

This stove uses a combustor to increase heat transfer to the room and reduce emissions.

The catalytic combustor takes dirty smoke and turns it into extra heat and lowers emissions.

NOTE: If the combustor is engaged (bypass closed) when the fireplace is still cool, it will not work, leading to dirty smoke, no extra heat, and a plugged combustor.

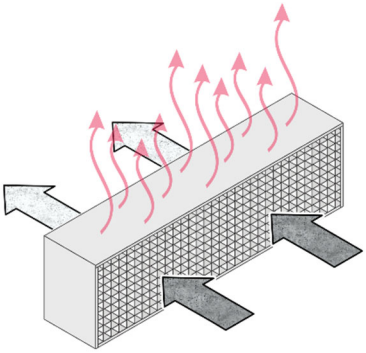

Follow the directions below to utilize the combustor to its fullest potential.

- Keep the bypass open (pulled out) until the stove becomes hot (approximately 15 to 30 minutes).
- Close the bypass (push in) when the stove is hot.
- Keep the bypass closed (pushed in) while the stove is operating, except when reloading.

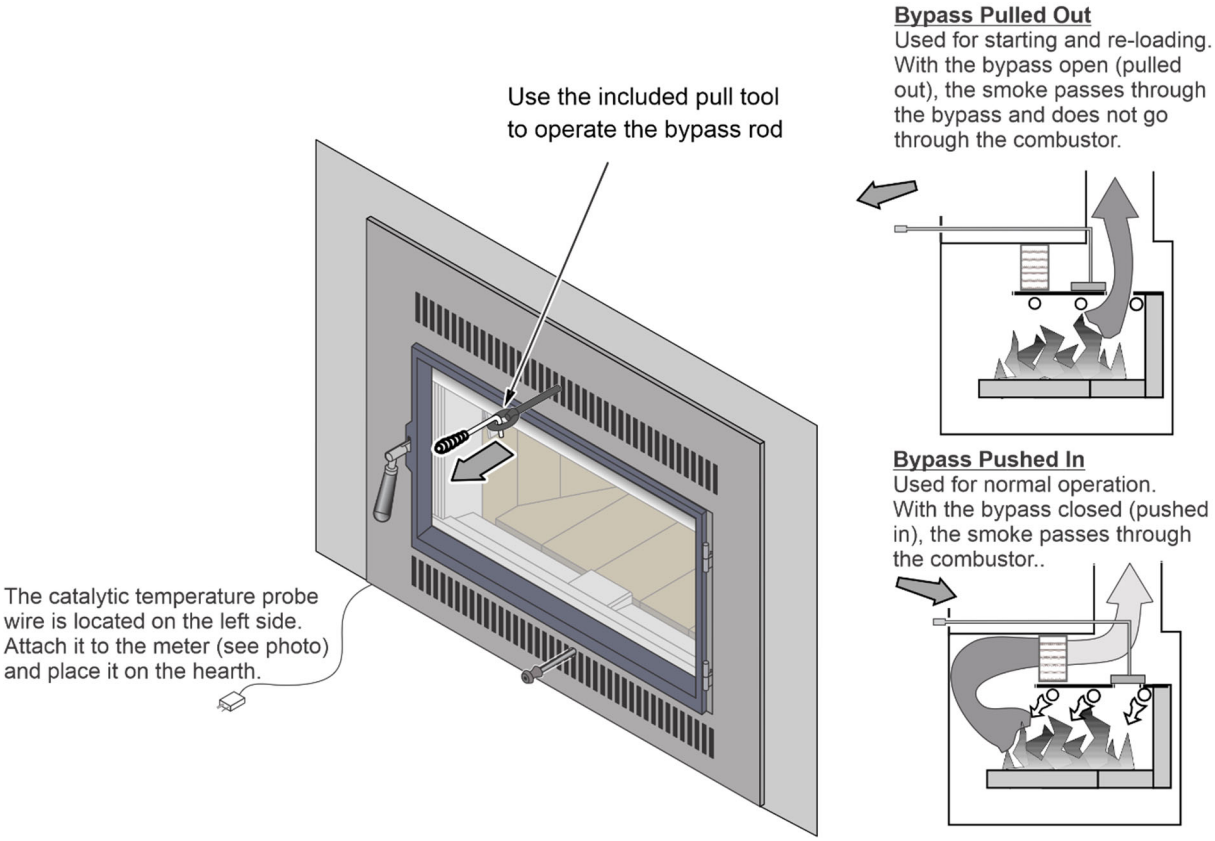

How to Check if Your Combustor is Working

A combustor temperature probe is included with the fireplace to monitor the combustor. After the bypass is engaged, the combustor temperature should rise, showing combustor operation. Combustor temperatures over 500° F (260° C) indicate the combustor is working and igniting unburnt fuel.

The combustor can also be viewed through the glass from below. You will notice the combustor glowing red when the combustor is working effectively.

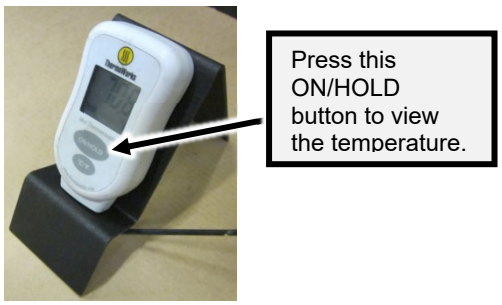

Before Starting a Fire

- Make sure the air control is pushed in. If additional air is needed, open the doors 1/4" during the first five minutes of start-up.

The bypass control becomes hot during operation - use gloves or a tool to prevent burns.

Do not use colored paper or any material other than newspaper and cordwood to start a fire. This may damage the combustor.

Never use gasoline, gasoline-type lantern fuel, kerosene, charcoal lighter fluid, or similar liquids to start or "freshen up" a fire in this stove. Keep all such liquids well away from the stove while it is in use.

DO NOT USE CHEMICALS OR FLUIDS TO START THE FIRE. DO NOT BURN GARBAGE OR FLAMMABLE FLUIDS SUCH AS GASOLINE, NAPHTHA, OR ENGINE OIL. Do not place such fuel within space heater installation clearances or within the space required for charging and ash removal.

If using a fire starter, use only products specifically designed for stoves - follow the manufacturer's instructions carefully.

HOT WHILE IN OPERATION. KEEP CHILDREN, CLOTHING, AND FURNITURE AWAY. CONTACT MAY CAUSE SKIN BURNS.

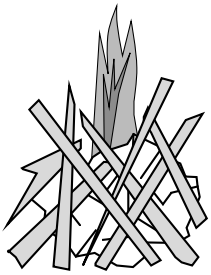

If the smoke does not pass up the chimney, ball up one sheet of newspaper, place it in the center of the firebox and light it. This should start the chimney drafting (this eliminates "cold air blockage").

Use plenty of kindling to ensure the stove reaches a proper temperature. Once the kindling is burning rapidly, place a few larger pieces of wood onto the fire.

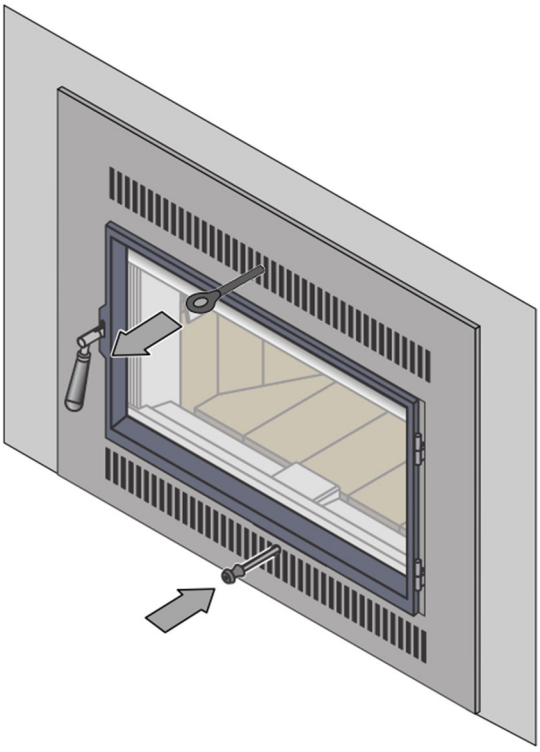

An optional Green Start ignitor is available from Travis Industries for this insert. Ask your local retailer for details.

Adjusting the Burn Rate

Use the air control slider to control the burn rate of the stove. See the illustration below for details.

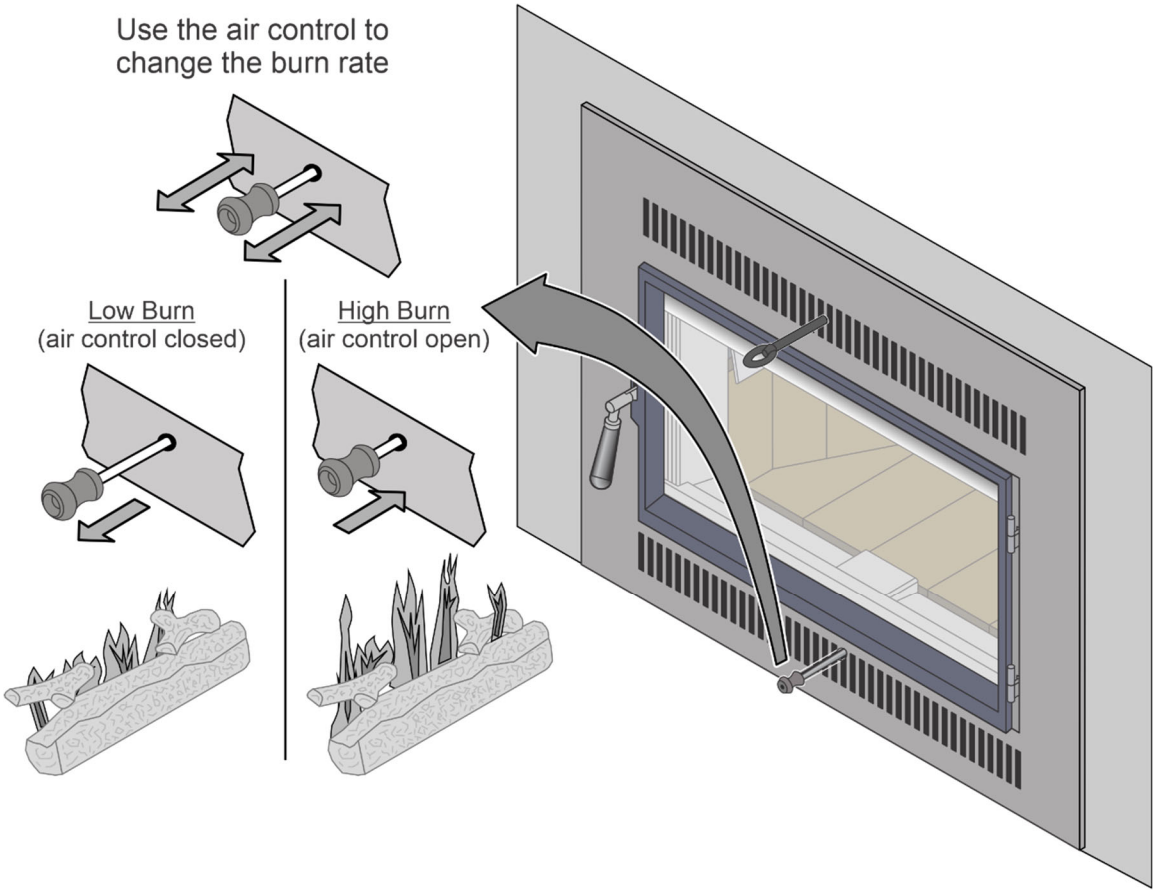

Approximate Air Control Settings:

High Burn:	Fully open (fully pushed in)
Medium-High Burn:	1/4" (6.35mm) from fully closed (fully pulled out) to 3/8" (9.53mm) from fully closed
Medium-Low Burn:	1/8" (3.18mm) from fully closed (fully pulled out) to 1/4" (6.35mm) from fully closed
Low Burn:	Fully closed (Fully pulled out) to 1/8" (3.18mm) from fully closed

The air control may become hot during operation - use gloves or a tool to prevent burns.

The air control may take several minutes to influence the burn rate. When making adjustments, you may wish to let the stove burn for 10 minutes to gauge performance.

Understanding Your Heater's Combustion System

This heater uses a dual combustion system detailed below:

Primary Combustion: This is the combustion (fire) that takes place directly on the wood. Primary combustion determines how fast the fire burns. Air for primary combustion is supplied through the air control. When you adjust the air control you control the amount of air that reaches the fire and creates primary combustion. The air control supplies air to the air wash (the air holes above the door opening – used to help clean the glass) and through the pilot orifice (center bottom of the door opening). By using the air control, and supplying air through these two openings, you control primary combustion.

Secondary Combustion: Secondary & Catalytic Combustion: This is the combustion (fire) that does not contact the wood. Secondary combustion burns the visible emissions or smoke that is not consumed during primary combustion. It takes place at the top of the firebox and can appear as a glowing flame near the secondary air tubes. Catalytic combustion takes place inside the catalytic combustor and is not viewable (you may, however, see the combustor glow). It also burns the visible emissions or smoke that is not consumed during primary combustion. Catalytic combustion can be monitored by using the included temperature meter. Your catalytic combustor is working when the output temperature is above 500° F. (260°C).

Items to Consider:

- During medium and high burn rates the stove will manage secondary and primary combustion on its own. When the heater is set to a low burn rate more care is needed to ensure the secondary combustion system works properly. Make sure the stove is hot and a good coal bed is established before adjusting your heater to low burn.
- Understanding the combustion system in this heater will help minimize the visible emissions this heater releases into the environment. The primary pilot orifice at the center bottom of the door opening is designed to help the secondary combustion at low burn settings. The pilot provides a small amount of air that burns up through the fuel load providing the heat and flame needed for the secondary system to ignite. The air tubes under the baffle need to remain ignited for low burns to be effective.
- As you load your heater for a low burn, take care in placing the wood. This will affect how well your secondary system works as the wood is consumed. Do not block the pilot orifice. Stack wood so the pilot air can burn its way up between the pieces, helping your heater burn effectively throughout the low fire. This will reduce the visible emissions your heater produces and increase the amount of heat you get from the wood. If you are unsure how well your heater is burning, look at the chimney cap to monitor visible emissions.

Burning Your Heater

Starting a Fire: Make sure your air control is all the way open and the bypass is in the open position. To reduce the amount of smoke when starting your fire, the "Top Down" method described below allows for the cleanest starts. Start with 2 large pieces of kindling 1"- 2" in diameter laid side to side on the firebox floor, a small amount of paper may be placed between these. Using small 1/2" to 1" diameter split kindling, 3- 4 layers in a crisscross pattern using 5 to 6 pieces per layer. Place 2 or 3 layers of larger kindling on the very top and light the middle of the stack. Shut the bypass after the fire is established and the door in 2-3 minutes. If the fire starts to die down, reopen the bypass and door, and leave it cracked open until the fire recovers and becomes established. Never leave your heater unattended if the door is not latched shut. Reload the stove when the kindling pile has burned about three-quarters of the way through with 16" medium-sized pieces of cordwood. Place a layer of 2 pieces orientated side to side on the coal bed and 3 pieces on the top, oriented front to back. A hot coal bed is critical to the clean combustion of the fuel. We cannot overstate the importance of a hot coal bed before slowing down the burn rate by adjusting the air control. Burn the first full load of cordwood completely through at the high burn rate to get our heater up to a good operating temperature and to establish a deep coal bed before reloading and adjusting the burn rate.

Reloading: When reloading a hot heater set the burn rate on high for at least 15 min before slowing it down.

Low Burn: If preparing for an overnight or low burn, a longer heat up period may be necessary. Reload the heater full of wood, 4 large pieces loaded front to back on the coal bed and 2 large pieces loaded side to side on top making sure there are air gaps between the middle to bottom pieces and the top 2 pieces so the pilot air can burn up through the middle load keeping the secondary combustion system hot and active throughout the burn. After loading, burn the heater on high for at least 15 minutes before setting the air control to low. Excessive creosote buildup (or sooting) in the heater at the end of a low burn signifies that the heater was not hot enough and the wood load was not burned long enough on high after loading before shutting down the air control.

Blower Operation

The blower will turn on once the stove is up to temperature. This is typically 15 to 30 minutes after starting the fire. Follow the directions below to alter the blower speed.

The blower rheostat dial may look different. It does operate in the same fashion.

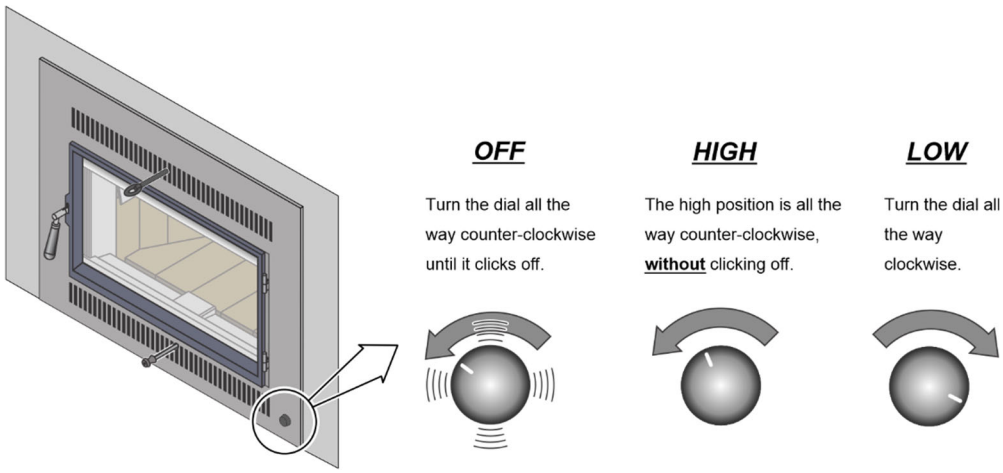

The blower may be used to affect heat output (i.e.: to reduce heat output, turn the blower down).

Route the power cord in a location where it will not come in contact with the appliance or become hot.

Re-Loading the Stove

Use gloves when reloading wood.

Follow the directions below to minimize smoke spillage while re-loading the stove.

1. Open the air control all the way (push it in).
2. Open the bypass all the way (pull it out).
3. Open the door slightly. Let the airflow inside the firebox stabilize before opening the doors fully.
4. Load wood onto the fire.

Overnight Burn

Follow the steps below to achieve an overnight burn.

1. Move the air control to high burn and let the stove become hot (burn for approximately 15 minutes).
2. Load as much wood as possible. Use large pieces if possible.
3. Let the stove burn on high for 15 minutes to keep the stove hot, and then turn the air control to low.
4. In the morning the stove should still be hot, with embers in the coal bed. Stir the coals and load small pieces of wood to re-ignite the fire, if desired.

Differences in chimney height and draft may lower overall burn times.

Normal Operating Sounds

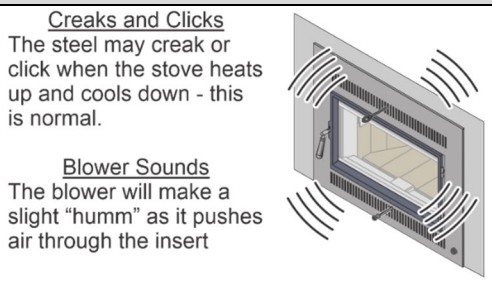

Hints for Burning

- Get the appliance hot before adjusting to low burn.
- Use smaller pieces of wood during start-up and high burns to increase the temperature.
- Use larger pieces of wood for overnight or sustained burns.
- Stack the wood tightly together to establish a longer burn.
- Be considerate of neighbors & the environment: burn dry wood only.
- Burn small, intense fires instead of large, slow-burning fires when possible.
- Learn your appliance's operating characteristics to obtain optimum performance.

Selecting Wood

- Dry Wood is Key – moisture content should be 15-20% for best results.
- Dry wood burns hot, emits less smoke, and creates less creosote.
- Testing Wood Moisture.
- Split wood stored in a dry area will be fully dry within a year. This ensures dry wood. If purchasing wood for immediate use, test the wood with a moisture meter. Some experienced wood burners can measure wood moisture by knocking pieces together and listening for a clear "knock" and not a "thud".

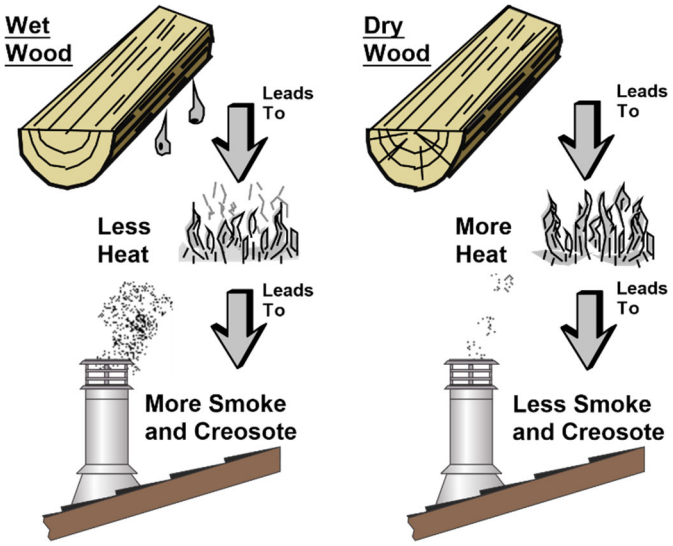

Why Dry Wood is Key

Wet wood, when burned, must release water stored within the wood. This cools the fire, creates creosote, and hampers a complete burn. Ask any experienced wood burner and they will agree: dry wood is crucial to good performance.

Wood Cutting and Storage

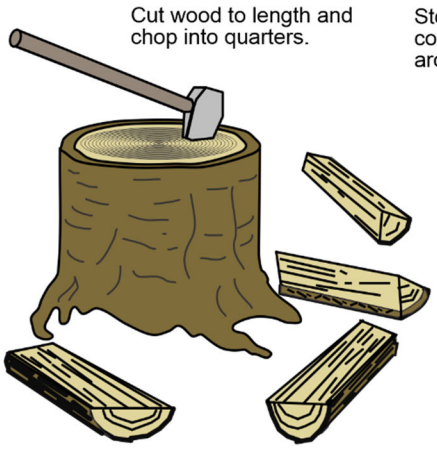

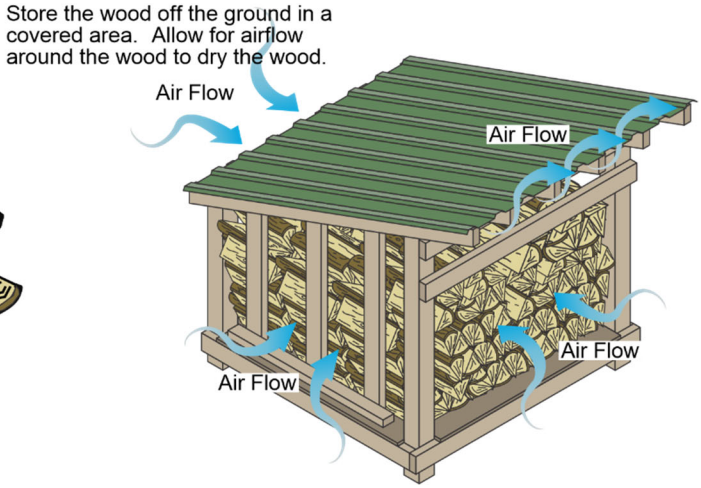

Do Not Burn List

This heater is designed to burn natural wood only. Higher efficiencies and lower emissions generally result when burning air-dried seasoned hardwoods, as compared to softwoods or green, freshly cut hardwoods.

DO NOT BURN:

- Garbage
- Lawn clippings or yard waste
- Materials containing rubber, including tires
- Materials containing plastic
- Waste petroleum products, paint or paint thinner, or asphalt products
- Materials containing asbestos
- Construction or demolition debris
- Railroad ties or pressure-treated wood
- Manure or animal remains
- Saltwater driftwood or other previously saltwater-saturated materials
- Unseasoned, “Green” or wet wood
- Paper products, cardboard, plywood, or particleboard *

*The prohibition against burning these materials does not prohibit the use of fire starters made from paper, cardboard, sawdust, wax, and similar substances for the purpose of starting a fire in an affected wood heater

Burning these materials may result in the release of toxic fumes or render the heater ineffective and cause smoke.

Troubleshooting

Problem	Possible Cause
Smoke enters the room during start-up	• Open the bypass (pg. 17). • Open the air control (pg. 20). • Cold Air Blockage - burn a piece of newspaper to establish a draft. • If the flame is not getting enough air, a small crack in the door is all that is needed.
Kindling does not start – The fire smolders	• Open the bypass (pg. 17). • Open the air control (pg. 20). • Not enough starter paper - use additional newspaper if necessary. • If the flame is not getting enough air, a small crack in the door is all that is needed.
Smoke enters the room while re-Loading	• Open the bypass before opening the door (pg. 17). • Open the air control before opening the door (pg. 20). • Let the air stabilize before fully opening the door. Then open the door approximately 1 inch. Let air go into the firebox for a few seconds. Once the smoke appears to be flowing up the chimney consistently, open the door. • Insufficient Draft - Chimney height and outside conditions can negatively affect the draft. In these cases, a small amount of smoke may enter the home. Adding more piping or a draft-inducing cap may help. • Chimney liner joints are not properly sealed at the insert connection.
The stove does not burn hot enough	• Wood is Wet - see the section "Selecting Wood" on page 23 for details on wood. • Make sure the air control is all the way open. Slide the control back and forth to ensure the control is not stuck. • Insufficient Draft - Chimney height and outside conditions can negatively affect the draft. In these cases, the fire may burn slowly. Adding more piping or a draft-inducing cap may help.
The blower does not run	• The stove is Not Up to Temperature - This is normal. The blower will come on when the stove is hot - usually 15 to 30 minutes. • Electricity Is Cut to the Blower - Check the household breaker or fuse to make sure it is operable.
The stove does not burn long enough	• Depending upon the wood, draft, and other factors, the burn time may be shorter than stated. Make sure the doors are sealing and not allowing air into the firebox - See the section "Door and Glass Inspection" on page 27 for details. • Check the ash bed for coals. Often, coals are still glowing under a slight bed of fly ash. By raking these into a pile you can re-start your stove quickly.

Must replace components with equipment equivalent to the original or approved by the manufacturer.

Failure to properly maintain and inspect your appliance may reduce the performance and life of the appliance, void your warranty, and create a fire hazard.

Establish a routine for the fuel, wood burner, and firing technique. Check daily for creosote build-up until experience shows how often you need to clean to be safe. Be aware that the hotter the fire the less creosote is deposited, and weekly cleaning may be necessary in mild weather even though monthly cleaning may be enough in the coldest months. Contact your local municipal or provincial fire authority for information on how to handle a chimney fire. Have a clearly understood plan to handle a chimney fire.

Daily Maintenance (during the heating season)

Remove Ash (if necessary)

Whenever ashes get 3 to 4 inches deep in your firebox or ash pan, and when the fire has burned down and cooled, remove excess ashes. Leave an ash bed approximately *1* inch deep on the firebox bottom to help maintain a hot charcoal bed. Let the stove cool completely before removing ashes (wait at least two hours after the last coal has been extinguished). Ashes should be placed in a metal container with a tight-fitting lid. The closed container of ashes should be placed on a noncombustible floor or the ground, away from all combustible materials, pending final disposal. The ashes should be retained in the closed container until all cinders have thoroughly cooled.

- Ash removal is **not** required after every fire. 1/2" to 1" of ash may be desirable because it slows the burn rate. Generally, remove ash once it has built up over 1". Follow the directions below to remove ash.

Improperly disposed of ashes lead to fires. Hot ashes placed in cardboard boxes, dumped in backyards, or stored in garages, are recipes for disaster.

Wood-burning stoves are inherently dirty. During cleaning have a vacuum ready to catch spilled ash (make sure ash is entirely extinguished).

There are vacuum cleaners specifically made to remove ash (even if the ash is warm). Contact your dealer for details.

Clean the Glass (if necessary)

This appliance has an air wash to keep the glass clean. However, burning unseasoned wood or burning at lower burn rates leads to dirtier glass (especially on the sides). Do not clean glass with abrasive cleaners. Allow the stove to fully cool before cleaning.

Apply glass cleaner or soapy water to the inside of the glass. Wipe with some newspaper or a paper towel to clean. For stubborn creosote, dip a moist paper towel or newspaper in cold ash before cleaning. The ash acts as a mild abrasive.

Allow the stove to fully cool. Apply glass cleaner or soapy water to the inside of the glass. Wipe with newspaper or a paper towel.

For stubborn Creosote:
Dip newspaper or a paper towel in cool ashes and wipe it on the glass. The ash acts as a light abrasive

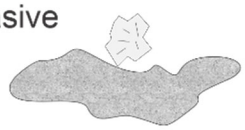

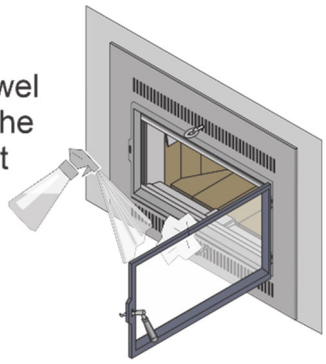

The glass will develop a very slight haze over time. This is normal and will not affect the viewing of the fire.

Monthly Maintenance (during the heating season)

Make sure the appliance has fully cooled prior to conducting service.

Door and Glass Inspection

The door can be lifted off the hinges if extensive repairs are conducted.

The door must form a seal to the firebox for the stove to work correctly. Inspect the door gasket as shown below.

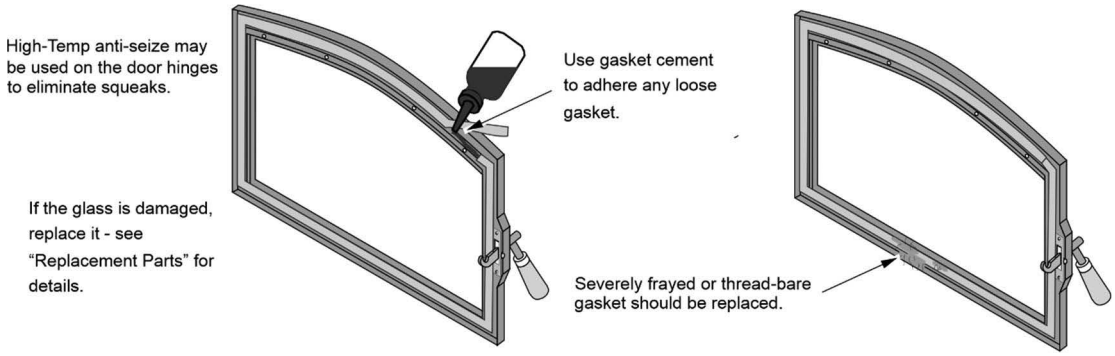

Door Latch Adjustment

The door latch should pull the door against the face of the stove (but not so tight as to not allow full handle rotation). If the latch requires adjustment, follow the directions below.

Remove the face. Loosen the bottom nut with a 7/16" wrench (see arrow to the right). Tap the bottom nut inwards, moving the door catch inwards. Tighten the nut and test the operation. You may need to repeat this process, either moving the nut inwards or outwards until the door catch is in the correct position.

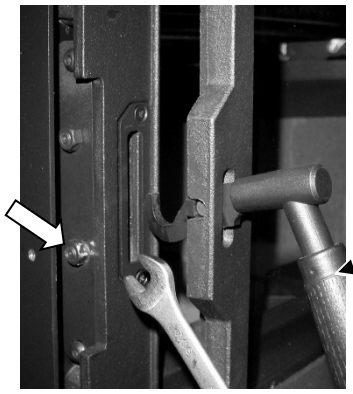

Creosote - Formation and Need for Removal

When wood is burned slowly, it produces tar and other organic vapors, which combine with expelled moisture to form creosote. The creosote vapors condense in the relatively cool chimney flue of a slow-burning fire. As a result, creosote residue accumulates on the flue lining. When ignited, this creosote makes an extremely hot fire. The chimney and chimney connector should be inspected at least once every two months during the heating season to determine if a creosote buildup has occurred. If creosote has accumulated 1/8" (3mm), it should be removed to reduce the risk of a chimney fire.

If you are not certain of creosote inspection, contact your dealer or local chimney sweep for a full inspection. Excess creosote buildup may cause a chimney fire that may result in property damage, injury, or death.

Operating this appliance continually at a low burn rate (air starvation) or using green (unseasoned) wood will increase the formation of creosote.

Yearly Maintenance

Make sure the appliance has fully cooled prior to conducting service.

Touch-Up Paint

If touch-up is needed use Stove-Bright® metallic black paint. To touch up nicks or dulled paint, apply the paint while the appliance is cool. Sand rusted or damaged areas before preparation (use 120 grit sandpaper). Clean and dry the area to prepare the surface. Wait at least one hour before starting the appliance. The touched-up area will appear darker than the surrounding paint until it cures from heat. Curing will give off some fumes while curing – open windows to ventilate.

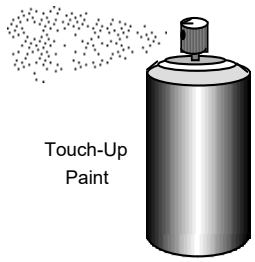

Cleaning the Air Duct and Blower

Use a vacuum to clean the air ducts (channels). This prevents dust from burning and creating odors.

The blower should be vacuumed every year to remove any buildup of dust, lint, etc.

Remove the face. Use a vacuum cleaner to remove any debris or dust in the convection chamber or near the blowers.

WARNING

Take care to not damage the blower blades.

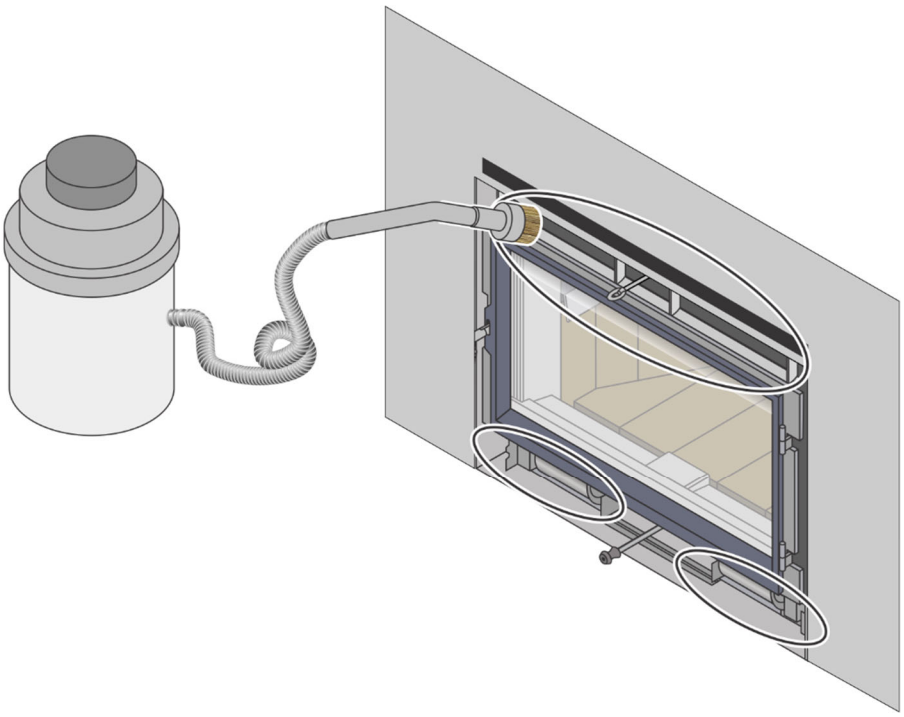

Cleaning the Combustor

Your combustor is available through an authorized Travis dealer. You can visually check the condition of your combustor by opening the door and looking above the baffle with a flashlight. If there is visible ash accumulation on the surface of your combustor it should be cleaned off with a soft-bristled brush. If there is visible creosote buildup (tar substance) on the combustor, burn your stove on high and the creosote should burn off. If the creosote does not burn off your combustor needs to be replaced. If the stove emits excessive smoke on medium and high burns your combustor may need replacement.

NOTE: Use an ash vacuum with a brush attachment to clean the combustor.

1. With the stove fully cooled, insert the ash vacuum nozzle into the area directly inside and above the door opening.

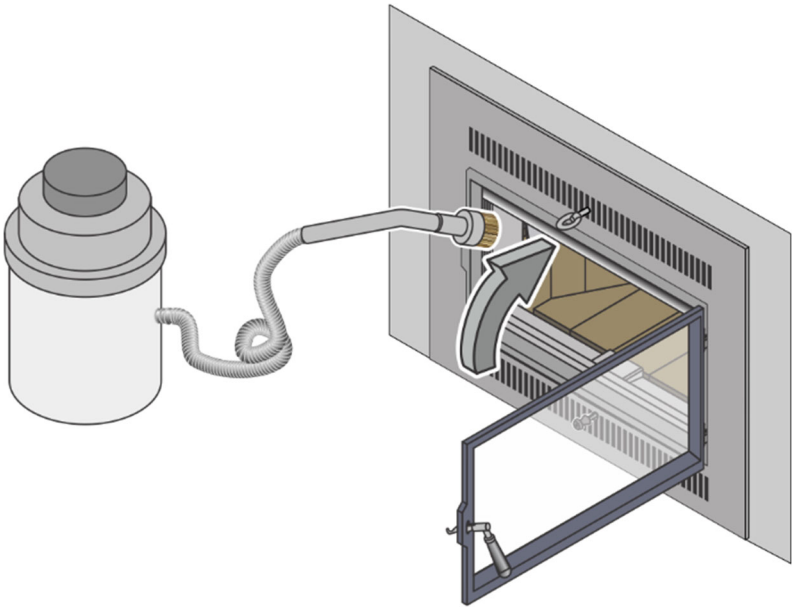

2. Carefully place the brush surface of the nozzle over the combustor openings and remove any ash or debris. Take care to prevent damage to the combustor (the surface is fragile).

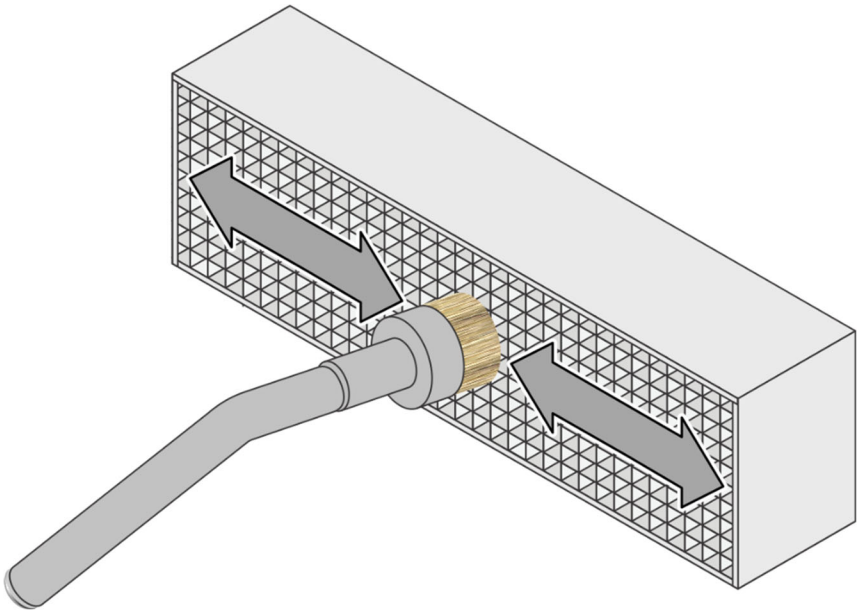

Combustor Inspection

It is important to periodically monitor the operation of the catalytic combustor to ensure that it is functioning properly and to determine when it needs to be replaced. A non-functioning combustor will result in a loss of heating efficiency and an increase in creosote and emissions. Following is a list of items that should be checked periodically:

- Combustors should be visually inspected at least three times during the heating season to determine if physical degradation has occurred (e.g., catalyst peeling, plugging, thermal cracking, mechanical cracking, or masking (becoming coated with fly ash or soot) (see pictures at bottom of page). The actual removal of the combustor is not recommended unless a more detailed inspection is warranted because of decreased performance.
- This heater is equipped with a temperature probe to monitor catalyst operation. Properly functioning combustors typically maintain temperatures above 500 °F and often reach temperatures in excess of 1,000 °F (see page 18 for further details).
- You can get an indication of whether the catalyst is working by comparing the amount of smoke leaving the chimney when the smoke is going through the combustor and catalyst light-off has been achieved, to the amount of smoke leaving the chimney when the smoke is not routed through the combustor (bypass mode).
    - Step 1 - Light stove per the instructions starting on page 21.
    - Step 2 - With smoke routed through the catalyst, go outside, and observe the emissions leaving the chimney.
    - Step 3 - Engage the bypass mechanism and again observe the emissions leaving the chimney. Significantly more smoke will be seen when the exhaust is not routed through the combustor (bypass mode).

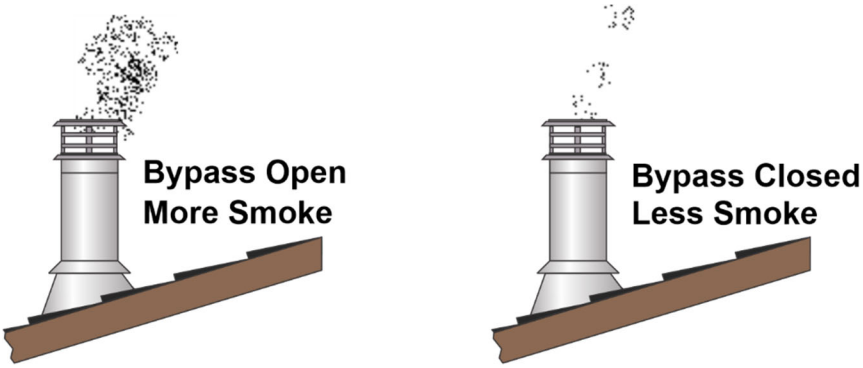

Example of combustor Thermal Cracking

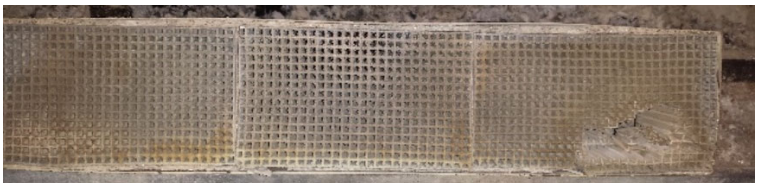

Example of combustor Masking

Baffle Removal & Replacement

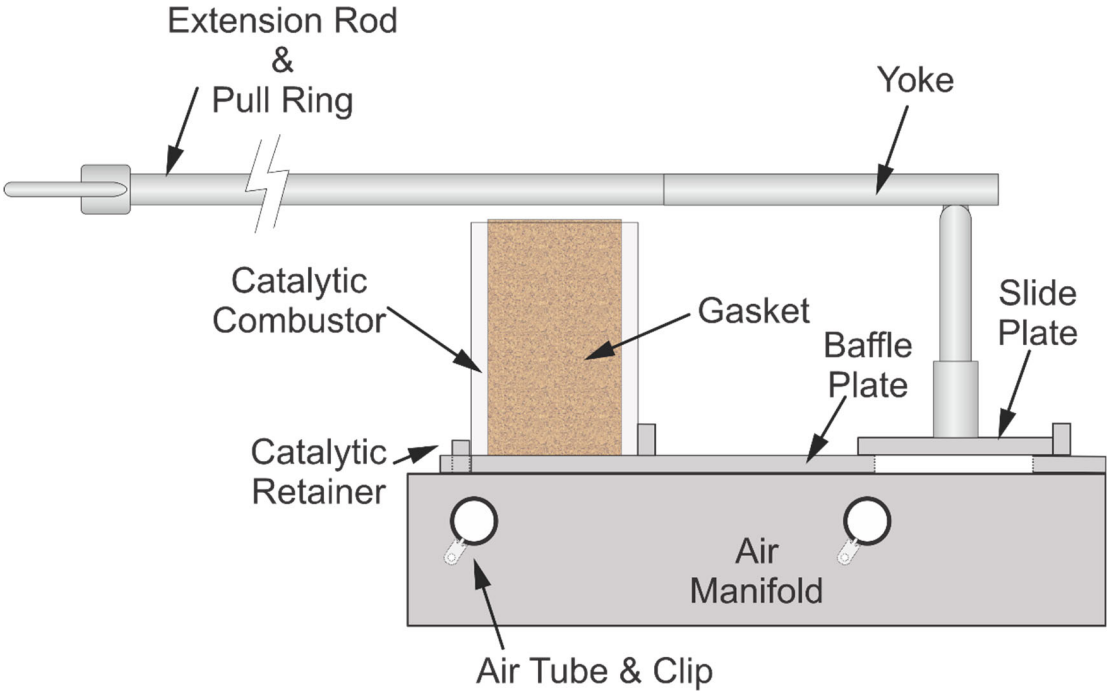

- Lift the catalytic retainer out of its slot on the baffle plate.
- Open the bypass by pulling the extension rod all the way outward.
- Reach up through the bypass and push the combustor forward until there is enough to grasp. Pull the combustor the rest of the way forward and remove it from the stove.

  NOTE: Be very gentle with the combustor, it is fragile after being exposed to heat.

- Unscrew the extension rod from the yoke and remove it from the stove.
- Lift the yoke out of the slide plate cups and remove it from the stove.
- Remove the slide plate from the top of the baffle.
- Follow these steps in reverse to reinstall the baffle.

NOTE: You will need to replace the gasket on the catalytic combustor when reinstalling it.

Door Parts

Rectangular Door

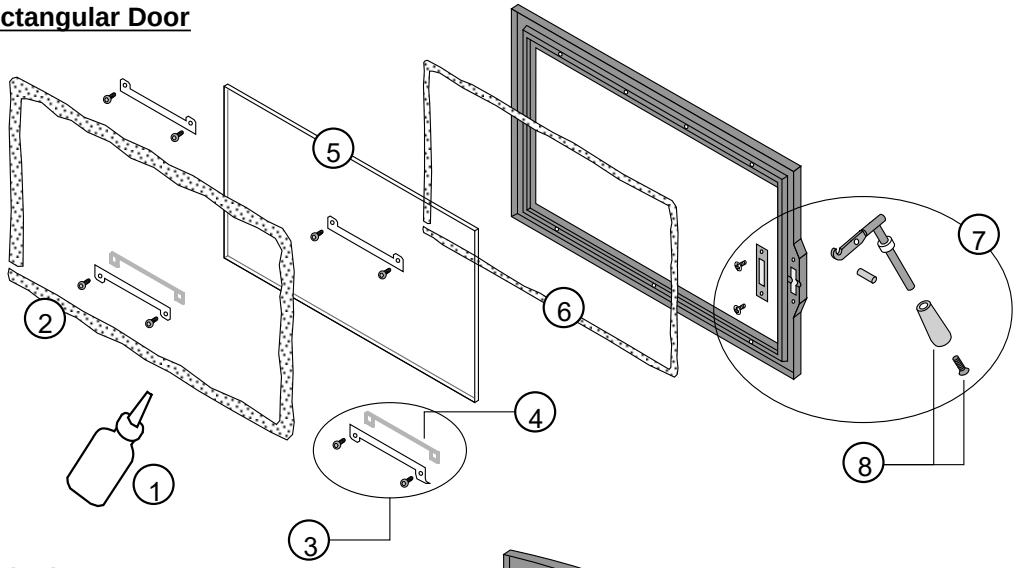

Arched Door

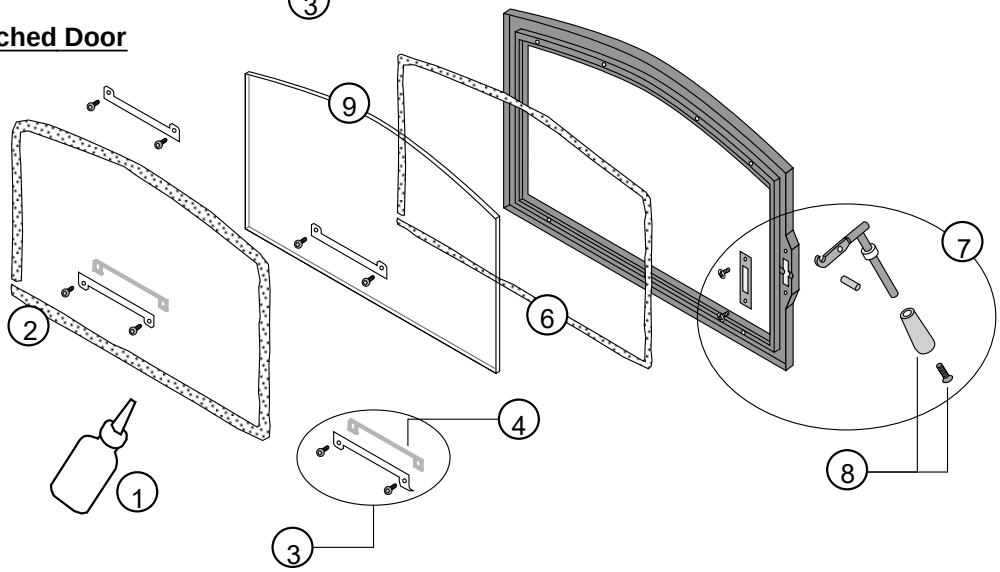

ID #	Description	Qty.	Part #
1	Gasket Cement, 4 oz.	1	250-04477
3	(4) Clips w Screws, Gaskets – Rect. (4) Clips w Screws, Gaskets - Arch	1 1	250-02191 250-02193
5	Glass (w Gasket) – Rectangular	1	250-02533
7	Handle Assembly	1	250-02196
9	Glass (w Gasket) – Arched	1	250-02905

ID #	Description	Qty.	Part #
2	Door Gasket, 1/2” x 80”	1	250-03582
4	(2) Clip Gaskets	1	250-02182
6	Glass Gasket (1/4” X 76”)	1	250-02184
8	Wood Handle w Screw	1	250-01305

Replacing the Glass

> ⚠ The glass must not contact the door retainer or glass clips directly. The glass gasket and glass clip gaskets insulate the glass to prevent cracking. Do not over-tighten the glass clips. Use only 5mm thick neo-ceramic glass.

Lay the glass gasket in the doorframe (cut off any excess gasket). Place the glass on the gasket. Secure the glass clips to hold the glass in place (make sure the glass clip gaskets are in place).

Replacing the Door Gasket

The door gasket inserts into the outer groove of the door retainer. Stove gasket cement holds it in place. Before installing, remove any residual cement. Lay the gasket in place (start at the lower-left corner) and cut off any excess gasket (do not stretch the gasket. The cement fully cures with heat from the stove. You may need to open and close the door repeatedly to get the gasket to seat fully.

Blower and Electrical Parts

Make sure to unplug the appliance prior to conducting service.

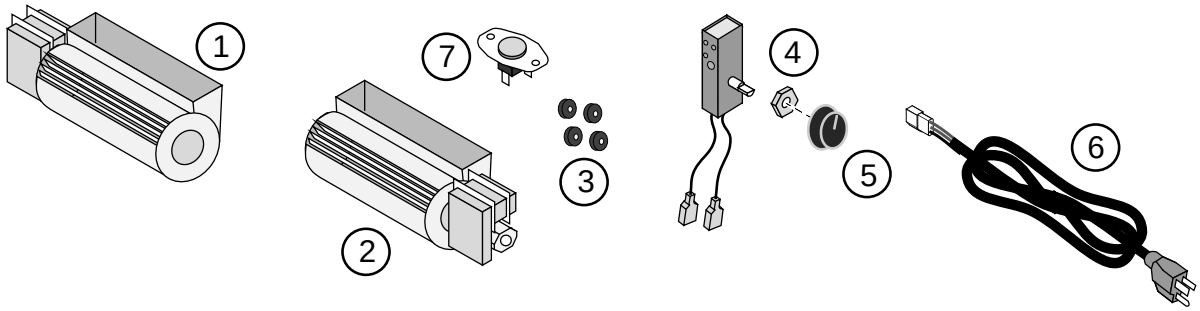

ID #	Description	Qty.	Part #
1	Left Blower	1	228-10069
3	(4) Blower Grommets w Spacers	1	93005017
5	Rheostat Knob	1	250-00369
7	Thermodisc	1	228-30050

ID #	Description	Qty.	Part #
2	Right Blower	1	228-10070
4	Rheostat w Nut & Washer	1	250-00302
6	Power Cord	1	250-00316

Firebox Parts

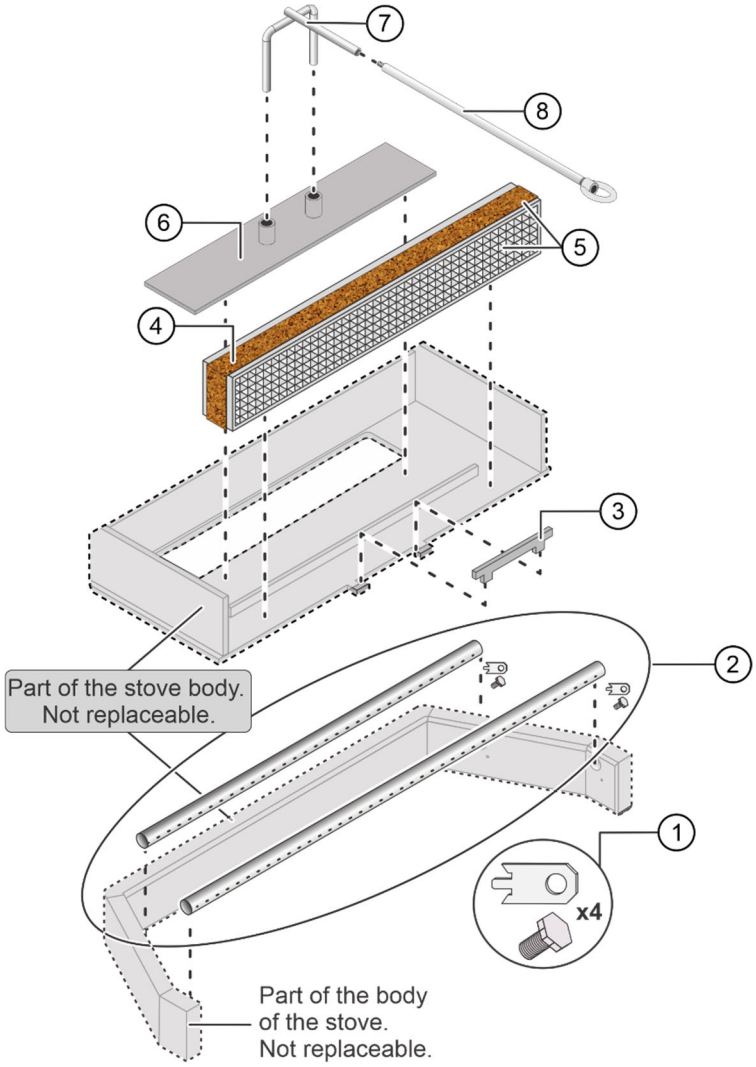

ID #	Description	Qty.	Part #
1	Air Tube Pins (w/ Screw)	1	250-02186
2	Sec. Air Tubes w/ Pins	1	98900296
3	Combustor Retainer	1	250-05858
4	Combustor Gasket ONLY	1	250-02643
5	Combustor w/Gasket	1	250-02489
6	Bypass Slide Plate	1	250-06094
7	Yoke	1	250-02493
8	Damper Extension Rod	1	98900333

Air Tube Identification

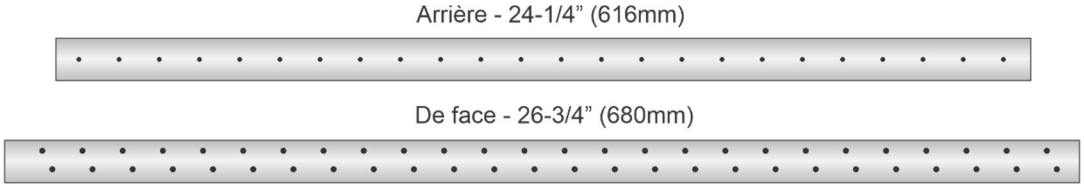

Baffle Removal & Replacement

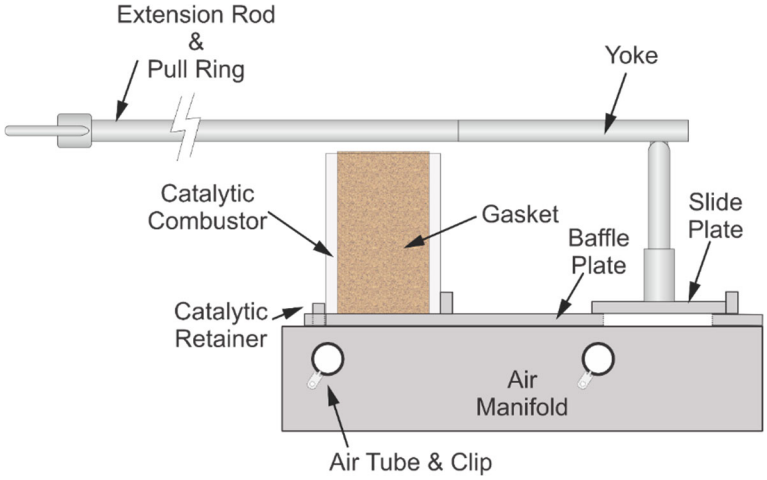

1. Open the door of the insert to gain access to the baffle and related components shown below (the baffle is shown without the unit for clarity).

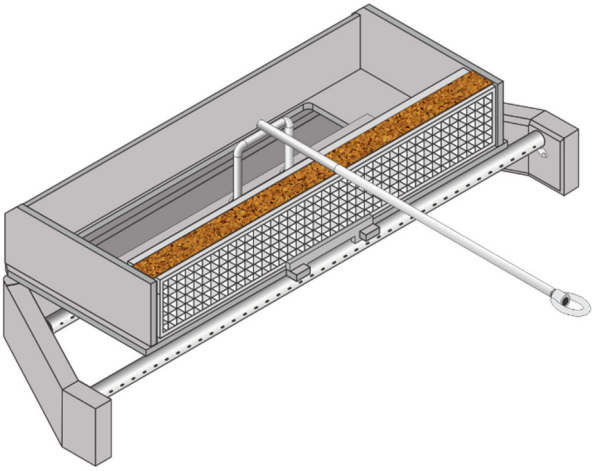

2. Release the combustor retainer from the front baffle plate by lifting it up. Remove it from the firebox.

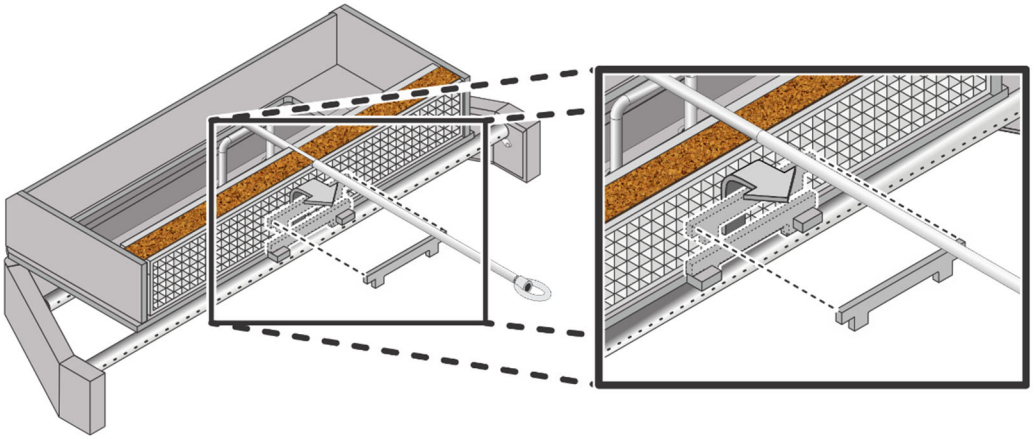

3. Open the bypass damper (pull the handle all the way out). Reach through the bypass hole and gently push on the back of the combustor.

NOTE: Take care to push evenly on both ends of the combustor or it may become jammed in the opening.

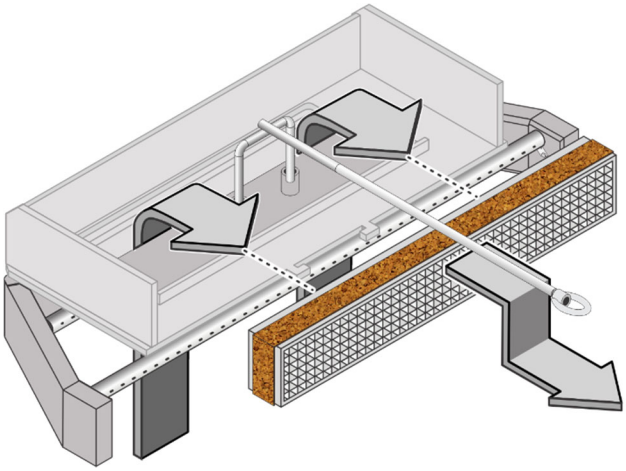

4. Unscrew and remove the bypass damper rod and ring from the damper yoke.

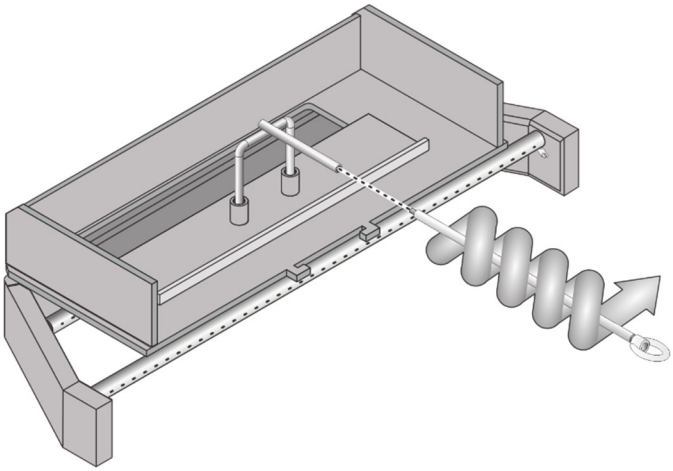

5. Reach in the bypass hole and remove the yoke from the bypass slide plate. Remove the yoke through the bypass hole.

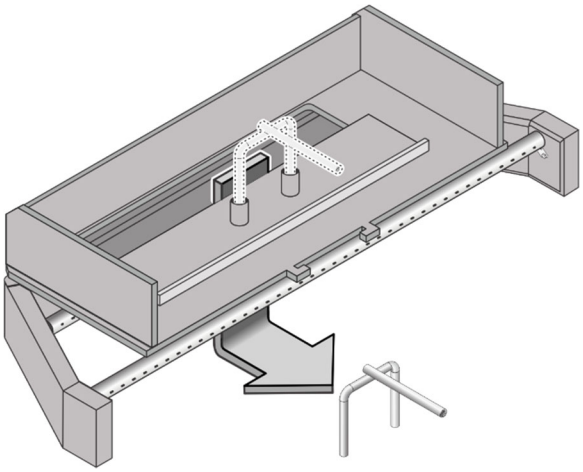

6. Lift the bypass slide plate and remove it from the firebox.

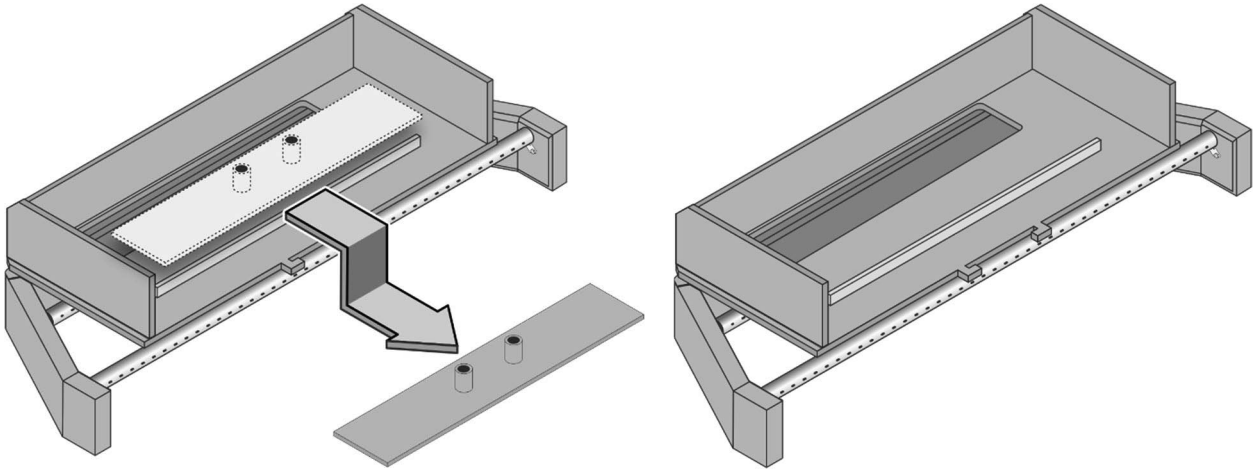

7. Remove the air tubes by following the steps below.

> Use penetrating oil (WD-40™ or similar) on the bolts before removing them. Let the oil soak in for several minutes before attempting to remove the bolts.

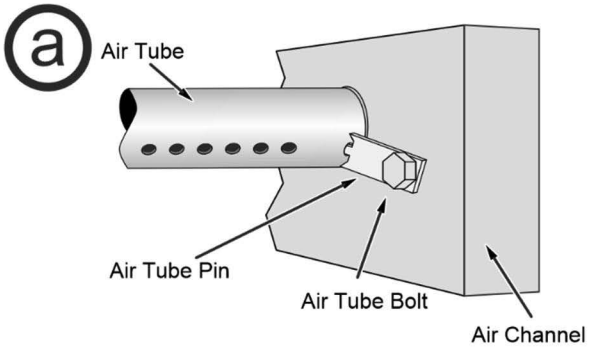

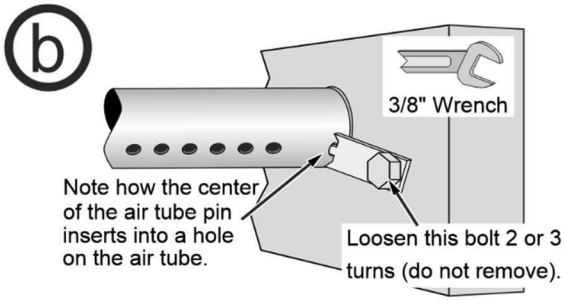

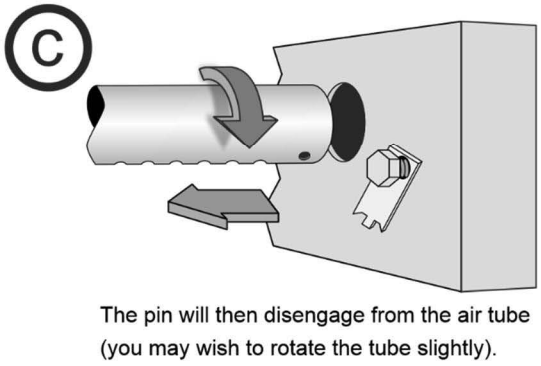

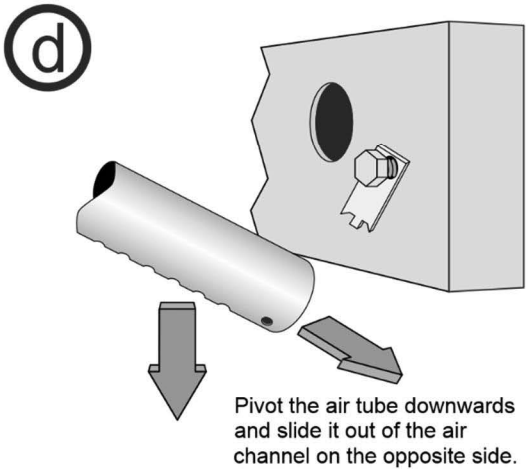

8. Reinstall the baffle by following the above steps in reverse.

Brick Removal & Replacement

Floor and Side Brick

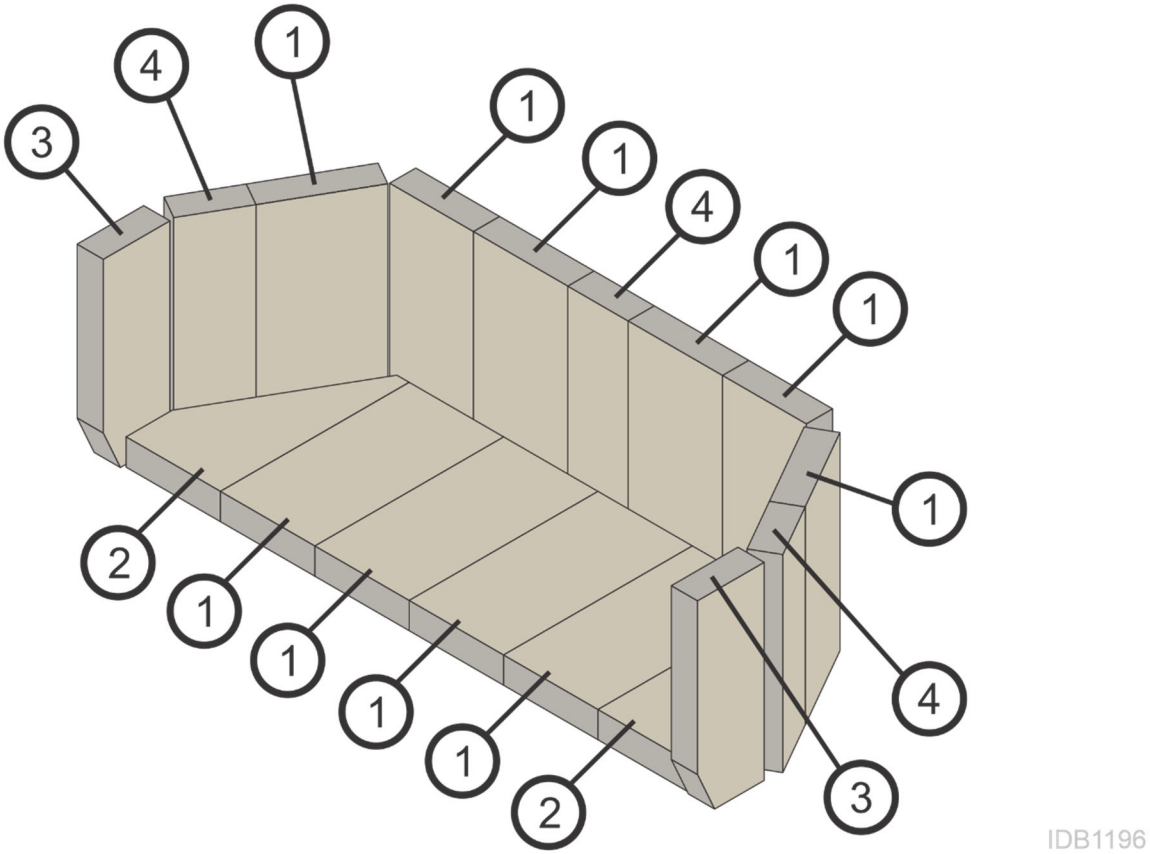

ID#	Description	Qty.	Part #
1	Firebrick, Whole 9”x4-1/2”	10	251-00000
3	Cut Brick, 9”x7”x2-5/16”	2	251-00070

ID#	Description	Qty.	Part #
2	Cut Brick, 9”x2-3/16”x9/16”	2	251-00071
4	Cut Brick, 9”x2-7/8”	3	251-00068

Do not pry the brick - they chip and crack easily.

Remove the floor bricks first. The side bricks are pinned in place by the floor firebrick. Clean the firebox prior to replacing the brick.

GreenStart™ Igniter – Firebrick and Housing Installation

This insert is compatible with the GreenStart™ automatic wood-stove igniter. This optional component uses a specialized firebrick and housing that are shipped with the insert. If you are using the igniter, install these components as shown below. The igniter is installed as shown in the instructions included with the igniter kit.

Igniter Firebrick

Igniter Housing

HINT: If you are not using the igniter, store these components inside the fireplace cavity in case the homeowner later decides to install them.

3. Remove the two firebricks from the front left corner of the firebox.

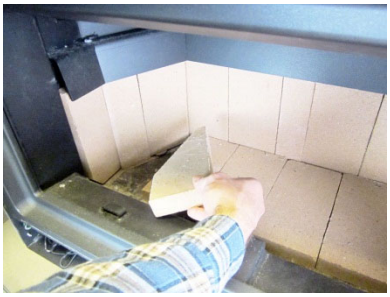

4. Place the igniter firebrick as shown below.

5. Replace the floor firebrick to complete the installation.

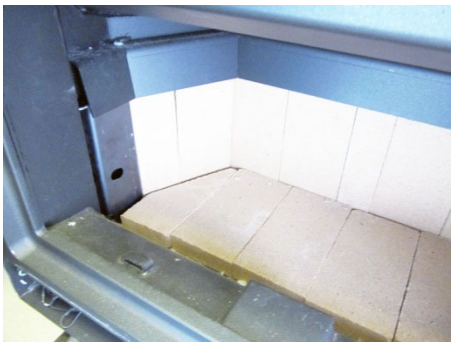

6. Remove the cover and gasket using a 5/16” nut driver. See the photos below.

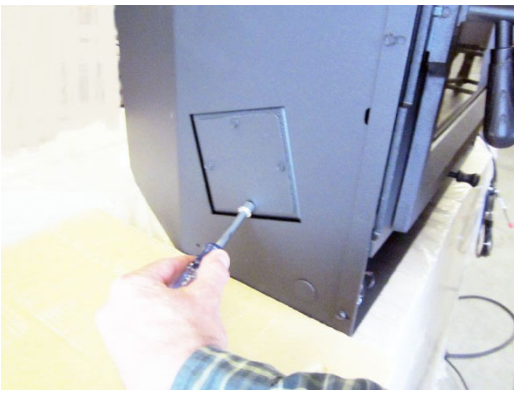

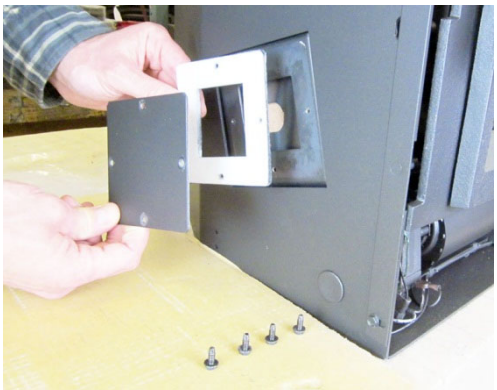

7. Install the housing as shown below.
   NOTE: The gasket’s hole patterns are unique. The housing must be re-installed in the same configuration. If the holes are not aligned, rotate the gasket 90°.

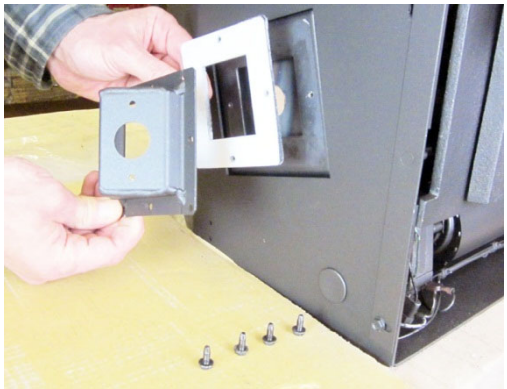

Limited 7 Year Warranty

Register your TRAVIS INDUSTRIES, INC. Limited 7 Year Warranty online at **traviswarranty.com.** TRAVIS INDUSTRIES, INC. warrants this appliance (appliance is defined as the equipment manufactured by Travis Industries, Inc.) to be defect-free in materials and workmanship to the original purchaser from the date of purchase as follows:

Check with your dealer in advance for any costs to you when arranging a warranty call.
Mileage or service charges are not covered by this warranty. This charge can vary from store to store.

Years 1 & 2 - COVERAGE: PARTS & LABOR

Firebox Assembly:
Firebox, Baffle Supports, Air Tubes, Air Channels, Convection Chamber

Door Assembly:
Solid Brass or Cast Door, Latch Assembly, Glass Retainers

Plated Finish
Plated Door, Legs, etc… (See "Conditions & Exclusions" # 9).

Catalytic Combustor
Catalytic Combustor (see "Conditions and Exclusions" # 10)

Ceramic Glass
Glass (breakage from thermal shock)

Firebrick and Ceramic Baffle Boards:
Breakage from thermal shock

Accessories
Legs, Panels, Blower

Re-Installation Allowance
In cases where the heater must be removed from the home for repairs, a partial cost of re-installation is covered (pre-authorization required)

One-Way Freight Allowance
One-way freight allowance on pre-authorized repair done at the factory is covered.

Air Control Assembly
Slider Plate, Pressure Plate

Exclusions: Paint, Gasketing

Years 3 Through 5 - COVERAGE: PARTS & LABOR

Firebox Assembly:
Firebox, Baffle Supports, Air Tubes, Air Channels, Convection Chamber

Air Control Assembly
Slider Plate, Pressure Plate

Door Assembly:
Solid Brass or Cast Door, Latch Assembly, Glass Retainers

Catalytic Combustor
Catalytic Combustor (see "Conditions and Exclusions" # 10)

One-Way Freight Allowance
One-way freight allowance on pre-authorized repair done at the factory is covered.

Exclusions: Paint, Gasketing, Plated Finish, Accessories (Legs, Panels, Blower), Glass, Firebrick, Re-Installation Allowance

Years 6 & 7 - COVERAGE: PARTS ONLY

Firebox Assembly:
Firebox, Baffle Supports, Air Tubes, Air Channels, Convection Chamber

Door Assembly:
Solid Brass or Cast Door, Latch Assembly, Glass Retainers

Air Control Assembly
Slider Plate, Pressure Plate

Exclusions: Paint, Gasketing, Plated Finish, Accessories (Legs, Panels, Blower), Glass, Firebrick, Re-Installation Allowance, One-Way Freight Allowance, Labor, Combustor

CONDITIONS & EXCLUSIONS

1. This new appliance must be installed by a qualified installer. It must be installed, operated, and maintained at all times in accordance with the instructions in the Owner's Manual. Any alteration, willful abuse, accident, neglect, or misuse of the product shall nullify this warranty.
2. This warranty is non-transferable and is made to the ORIGINAL purchaser, provided that the purchase was made through an authorized Travis dealer.
3. Discoloration and some minor expansion, contraction, or movement of certain parts and resulting noise, is normal and not a defect and, therefore, not covered under warranty. Over-firing (operation where the steel may glow red) of this appliance can cause serious damage and will nullify this warranty.
4. The warranty, as outlined within this document, does not apply to the chimney components or other non-Travis accessories used in conjunction with the installation of this product. If in doubt as to the extent of this warranty, contact your authorized Travis retailer before installation.
5. Travis Industries will not be responsible for inadequate performance caused by environmental conditions such as nearby trees, buildings, rooftops, wind, hills, or mountains or negative pressure or other influences from mechanical systems such as furnaces, fans, clothes dryers, etc.
6. This Warranty is void if:
   a. The unit has been operated in atmospheres contaminated by chlorine, fluorine, or other damaging chemicals.
   b. The unit is subject to submersion in water or prolonged periods of dampness or condensation.
   c. Any damage to the unit, combustion chamber, heat exchanger, or other components due to water, or weather damage which is the result of, but not limited to, improper chimney/venting installation.
7. Exclusions to this 7 Year Warranty include: injury, loss of use, damage, failure to function due to accident, negligence, misuse, improper installation, alteration or adjustment of the manufacturer's settings of components, lack of proper and regular maintenance, damage incurred while the appliance is in transit, alteration, or act of God.
8. This 7 Year warranty excludes damage caused by normal wear and tear, such as paint discoloration or chipping, worn or torn gaskets, chipped or cracked firebrick, etc. Also excluded is damage to the unit caused by abuse, improper installation, modification of the unit, or the use of fuel other than that for which the unit is configured (use cordwood only).
9. Damage to brass or plated surfaces caused by fingerprints, scratches, melted items, or other external sources left on the surfaces from the use of abrasive cleaners is not covered in this warranty. Damage to the surfaces from over-firing (operation where the steel may glow red) is not covered in this warranty.
10. Damage to the combustor due to mishandling, removal, cleaning, or other handling is not covered. Degradation of the combustor due to the burning of anything other than natural cordwood is not covered. Burning of trash, garbage, artificial or paper logs, gift wrappings, coal, lighter fluids, chemical starters, treated or painted wood, driftwood or chemical cleaners will void the combustor warranty. These items contain chemicals that may cause the combustor to become deactivated.
11. TRAVIS INDUSTRIES, INC. is free of liability for any damages caused by the appliance, as well as inconvenience expenses and materials. Incidental or consequential damages are not covered by this warranty. In some states, the exclusion of incidental or consequential damage may not apply.
12. This warranty does not cover any loss or damage incurred by the use or removal of any component or apparatus to or from the Travis appliance without the express written permission of TRAVIS INDUSTRIES, INC. and bearing a TRAVIS INDUSTRIES, INC. label of approval.
13. Any statement or representation of Travis products and their performance contained in Travis advertising, packaging literature, or printed material is not part of this 7-year warranty.
14. This warranty is automatically voided if the appliance's serial number has been removed or altered in any way. If the appliance is used for commercial purposes, it is excluded from this warranty.
15. No dealer, distributor, or similar person has the authority to represent or warrant Travis products beyond the terms contained within this warranty. TRAVIS INDUSTRIES, INC. assumes no liability for such warranties or representations.
16. Travis Industries will not cover the cost of the removal or re-installation of hearths, facing, mantels, venting, or other components.
17. If for any reason any section of this warranty is declared invalid, the balance of the warranty remains in effect and all other clauses shall remain in effect.
18. This 7-year warranty is the only warranty supplied by Travis Industries, Inc., the manufacturer of the appliance. All other warranties, whether express or implied, are hereby expressly disclaimed and the purchaser's recourse is expressly limited to the warranties set forth herein.

IF WARRANTY SERVICE IS NEEDED:

1. If you discover a problem that you believe is covered by this warranty, you MUST REPORT it to your Travis dealer WITHIN 30 DAYS, giving them proof of purchase, the purchase date, and the model name and serial number.
2. Travis Industries has the option of either repairing or replacing the defective component.
3. If your dealer is unable to repair your appliance's defect, he may process a warranty claim through TRAVIS INDUSTRIES, INC., including the name of the dealership where you purchased the appliance, a copy of your receipt showing the date of the appliance's purchase, and the serial number on your appliance. At that time, you may be asked to ship your appliance, freight charges prepaid, to TRAVIS INDUSTRIES, INC. TRAVIS INDUSTRIES, INC., at its option, will repair or replace, free of charge, your appliance if it is found to be defective in material or workmanship within the time frame stated within this 7-year warranty. TRAVIS INDUSTRIES, INC. will return your appliance, freight charges (years 1 to 5) prepaid by TRAVIS INDUSTRIES, INC., to your regional distributor, or dealership.
4. Check with your dealer in advance for any costs to you when arranging a warranty call. Mileage or service charges are not covered by this warranty. This charge can vary from store to store.

Listing Label

Listed by
OMNI-Test Laboratories, Inc.
Report No. 0028WN130E, 0028WN130S

DO NOT REMOVE THIS LABEL

CONTACT LOCAL BUILDING OR FIRE OFFICIALS ABOUT INSTALLATION AND RESTRICTIONS IN YOUR AREA.
SUITABLE FOR USE IN MASONRY FIREPLACES.

CERTIFIED TO UL STD 1482-2022; CERTIFIED TO CAN/ULC-S628-2022

MODEL:
LARGE FLUSH WOOD NEXGEN-HYBRID
Certified for USA and Canada

SERIAL NO:

PREVENT HOUSE FIRES - Install and use only in accordance with the manufacturer's installation clearances and operating instructions. Not to be installed in any factory-built fireplace. Contact your local building or fire officials about restrictions and installation inspection in your area. Refer to local building codes and manufacturer's instructions for precautions required for passing a chimney through a combustible wall or ceiling. Do not run a chimney connector through a combustible wall or ceiling. Do not connect this unit to a chimney flue serving another appliance. Clearances may be reduced by methods specified in NFPA 211, listed wall shields, pipe shields, or other means approved by local building or fire officials. This wood heater needs periodic inspection and repair for proper operation. Consult the owner's manual for further information. It is against federal regulations to operate this wood heater in a manner inconsistent with the operating instructions in the owner's manual or if the catalytic element is deactivated or removed. Burning of metal foils, plastic, garbage, sulphur and diesel oil will render the catalyst in the combutor inactive. The performance and durability of the catalytic combustor has not been evaluated as part of the certification. The combustor used in this appliance (part no. 250-02489) is fragile and must be handled carefully. Burn cord wood only.

Do not obstruct the space beneath the heaters or combustion air openings.

Do not route power cord under or in front of appliance.

Replace glass only with 5mm neoceramic or ceramic glass.

Electrical Rating: 115V., 60 Hz, 1.8 Amps

Blowers: #228-10069 / 228-10070

Made in U.S.A.

U.S. ENVIRONMENTAL PROTECTION AGENCY
Certified to comply with 2020 particulate emission standards using crib wood.
0.8 g/h, ASTM E2780-10, ASTM 2515-11, CSA B415.1-10

TRAVIS INDUSTRIES HOUSE OF FIRE

Manufactured by:
TRAVIS INDUSTRIES, INC.
12521 Harbour Reach Drive
Mukilteo, WA 98275
www.travisproducts.com

DATE OF MANUFACTURE

2023	2024	2025	2026	Jan	Feb	Mar	Apr	May	Jun	Jul	Aug	Sep	Oct	Nov	Dec
☐	☐	☐	☐	☐	☐	☐	☐	☐	☐	☐	☐	☐	☐	☐	☐

1497

MASONRY FIREPLACE INSTALLATION

Minimum 6 in. / 153 mm diameter Stainless Steel liner, full re-line required.

In Canada; a fireplace insert shall be installed with a continuous chimney liner extending from the fireplace insert to the top of the chimney. A chimney liner shall be tested for conformance with Class 3 requirements of CAN/ULC-S635, Standard for Lining Systems for Existing Masonry or Factory-Built Chimneys and Vents, or CAN/ULC-S640, Standard for Lining Systems for New Masonry Chimneys.

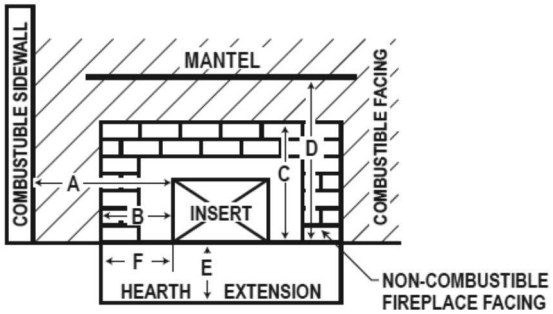

Minimum Clearances To Combustibles And Hearth Requirements:	Masonry Fireplace Installations
A.	10.5 in. / 267 mm
B.	5.5 in. / 140 mm
C.	37 in. / 940 mm
With Shield	N/A
D.	41 in. / 1042 mm
With Shield	N/A
E.	US: 16.0 in. (407 mm) / CAN: 18.0 in. (458 mm)
F.	US: 6.0 in. (153 mm) / CAN: 8.0 in. (204 mm)

Notes

Notes

Additional Accessories Needed for Installation..7
Additional Requirements for Canada 7
Adjusting the Burn Rate 20
Baffle Removal & Replacement 31, 34
Before Starting a Fire 19
Before Your First Fire 15
Blower and Electrical Parts 33
Blower Operation 22
Brick Removal & Replacement 37
Bypass Operation.....17
Clean the Glass.....26
Cleaning the Air Duct and Blower 28
Cleaning the Catalytic Combustor 29
Combustor Inspection 30
Creosote - Formation and Need for Removal..27
Curing the Paint 15
Daily Maintenance (during the heating season) 26
Dimensions 6
Do Not Burn List.....24
Door and Glass Inspection.....27
Door Latch Adjustment.....27
Door Parts 32
Drafting Performance 11
Electrical Requirements 13
Emissions and Efficiency 6
Face Installation 13
Features 6
Firebox Parts.....33
Fireplace Altered Tag.....8
Fireplace Requirements.....8
Flue Installation 12
GreenStart™ Igniter – Firebrick Installation 38
Hearth Extension Requirements 10
Heating Specifications 6
Hints for Burning 23
Important Information.....2
Insert Placement Requirements 9
Insert Rollers.....11
Installation Options 6
Introduction 2
Listing Label.....41
Mantel Requirements.....10
Monthly Maintenance (during the heating season).....27
Normal Operating Sounds 22
Opening the Door.....16
Over-Firing the Stove.....15
Overnight Burn.....22
Packing List.....7
Planning the Installation.....7
Preparation for Installation.....7
Re-Loading the Stove 22
Remove Ash (if necessary).....26
Replacing the Door Gasket.....32
Replacing the Glass.....32
Re-Routing the Electrical Cord to the Left Side 14
Safety Notice.....15
Sealing the Flue to the Insert.....12
Selecting Wood.....23
Surround Panel Installation.....13
Touch-Up Paint.....28
Troubleshooting 25
Verify the Installation 15
Why Dry Wood is Key.....23
Wood Cutting and Storage 23
Yearly Maintenance 28